Y-bearing plummer block units

SYWK 25 YTH

Material	Composite for food and b everage

Dimensions

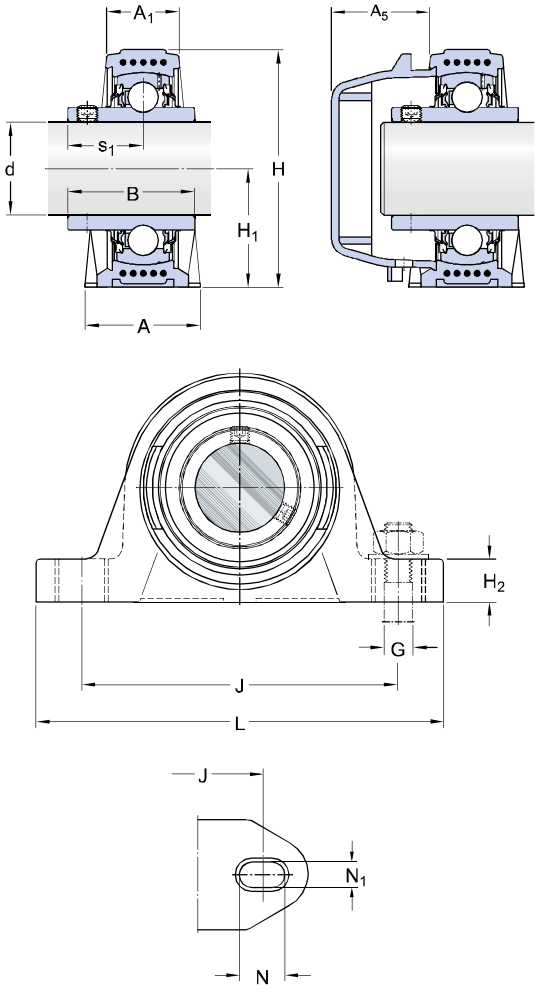

d		25	mm
A		32	mm
A_1		22	mm
A_5		26.3	mm
B		34.1	mm
H		70.5	mm
H_1		36.5	mm
H_2		16	mm
J		105	mm
J	max.	110	mm
J	min.	100	mm
L		134	mm
N		17.5	mm
N_1		12.5	mm
s_1		19.8	mm

Calculation data

Basic dynamic load rating	C	11.9	kN
Basic static load rating	C_0	7.8	kN
Fatigue load limit	P_u	0.33	kN
Limiting speed		4300	r/min
(with shaft tolerance h6)			

Mass

Mass bearing unit		0.32	kg

Mountin in ormation

Hexagonal key si e for grub screw	N	3	mm
ecommended tightening tor ue for grub screw		4	N m
ecommended diameter for attachment bolts mm		10	mm
ecommended diameter for attachment bolts inch		0.375	in

ertainin roducts

Housing	505
Bearing	A 205 2 F/H

ro riate roducts

nd cover	C 205