Safety Relay K-RBS

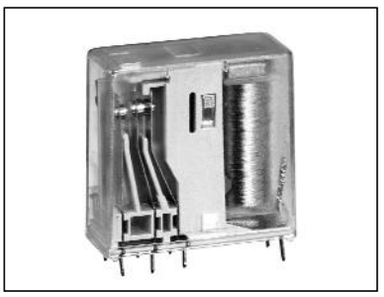

General
- 2 Contacts, or 2 CO
- Force guided contact set
- According to EN 50205, Application type A, Application type B at 2 change over contacts
- Ambient temperature – 10 ... + 70 °C
- Soldering heat resistance 260 °C/5s
- RoHS compliance

Connections
- Soldering pins for PCB, presoldered with Sn100

Drive
- Direct current, neutral monostable

Approvals
- cUL/us • TÜV

Standards
- EN 50205 • IEC 61810-1 • UL 508

Technical Data
mechanical

Dimensions L x W x H (in mm)	30 x 12,5 x 29
Shock resistance NO-contact/NC-contact	10/10 g, 16 ms half sinus
Vibration resistance NO-contact/NC-contact	5/5 g, 5 – 55 Hz
Operating time NC-contact, conctact opens	typical 6 ms
Operating time NO-contact, contact closes	typical 12 ms
Releasing time NO-contact, contact opens	typical 4 ms
Releasing time NC-contact, contact closes	typical 6 ms
Mechanical service life (without load)	$>10^7$ cycles
Weight	25 g

Technical Data
electrical

Max. switching capacity		AC 1.500 VA, DC *W
Max. switching voltage		AC 230/240 V, DC *V
Max. switching current		6 A
Constant current I_{th}		6 A
Constant current I_{th2} at the same time over 2 contacts		4,2 A
Switching capacity NO/NC-contact	AC-15 230/240 V	Ie= 4/1,2 A
NO/NC-contact	DC-13 24 V	Ie= 2/1,2 A
Electrical service life (with nominal load)		$>10^5$ cycles
Short circuit capacity 1.000 A/AC 230 V		6 A gL/gG-fuse

* see DC-switching capacity

Insulation

Over voltage category (Ü) III
Degree of pollution (V) 2
Insulating material group II

B-I = Basic insulation
V-I = Reinforced (double) insulation

Insulation between	Nominal voltage network system		Air-/ creeping distance	Test Voltage 50Hz/60 s
	AC 120/240 V	AC 230/400 V		
Contact – Contact	V-I	B-I	> 3 mm	AC 2.500 V
Contactset - Drive	V-I	B-I	> 3 mm	AC 4.000 V

Dimensions

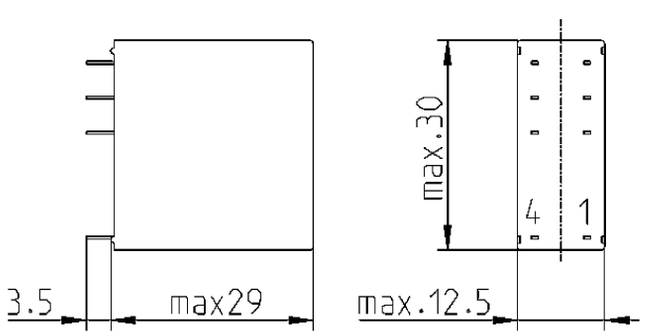

Safety Relay K-RBS

Type key

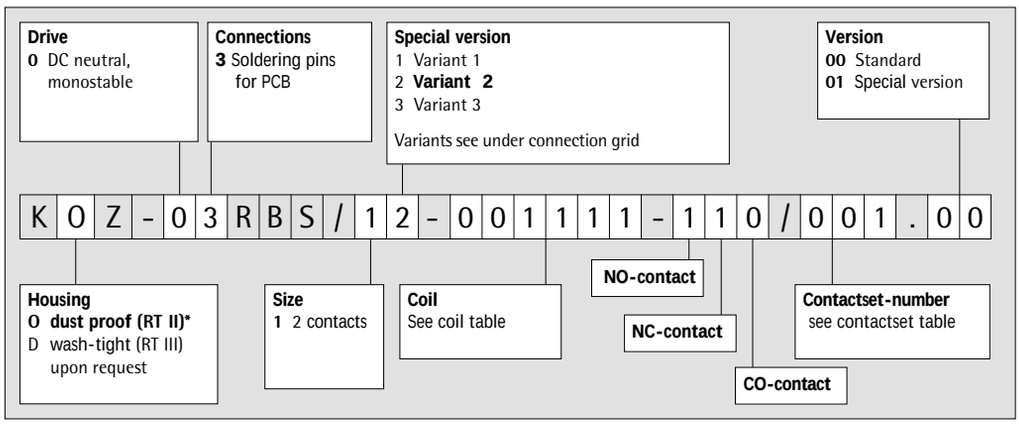

* **Preferred version**

Contactset table

Variants, see under Connection grid	Number of contacts NO/NC/CO-contacts	$AgSnO_2$ +0,2 µm Au	$AgSnO_2$ +2 µm Au	Contact material
Variant 1	110	008	007	Contactset-number
Variant 2	110	001	002	
Variant 3	002	003	004	

Coil table

All values at ambient temperature Tu = 20 °C

Coil-No.	Resistance R/O	Resistance-tolerance±	U_1/V	U_2/V	U_3/V	$U_{rück}$/V	Printing U_{nom}/V
1020	45	7%	3,6	10,9	10	0,2	6
1180	190	8%	8,0	22,4	21	0,5	12
1111	730	7%	14,8	44,0	39	1,0	24
1006	2.770	9%	30,1	85,2	77	1,9	48
1094	4.950	10%	42,4	113,3	106	2,6	60
1002	15.440	14%	76,2	197,6	181	4,5	110

U_1: Minimum operating voltage with consideration of coil self heating
U_2: Thermal restricted maximum coil voltage
U_3: Maximum admissible coil voltage to realize a contact gap of > 0,5 mm also at a contact fault
$U_{rück}$: Releasing voltage

Further coils are possible and available

Running types

Article-No.	Type key	Printing U_{nenn}	U_1/V	U_2/V	U_3/V	$U_{rück}$/V
RBS-2601	KOZ-03RBS/13-001111-002/003.00	DC 24 V	14,8	44,0	39	1,0
RBS-2602	KOZ-03RBS/13-001111-002/004.00	DC 24 V	14,8	44,0	39	1,0
RBS-2603	KOZ-03RBS/12-001111-110/002.00	DC 24 V	14,8	44,0	39	1,0
RBS-2604	KOZ-03RBS/13-001180-002/004.00	DC 12 V	8,0	22,4	21	0,5
RBS-2607	KOZ-03RBS/13-001002-002/004.00	DC 110 V	76,2	197,6	181	4,5
RBS-2608	KOZ-03RBS/12-001111-110/001.00	DC 24 V	14,8	44,0	39	1,0
RBS-2613	KOZ-03RBS/13-001180-002/003.00	DC 12 V	8,0	22,4	21	0,5
RBS-2617	KOZ-03RBS/13-001006-002/003.00	DC 48 V	30,1	85,2	77	1,9
RBS-2624	KOZ-03RBS/13-001002-002/003.00	DC 110 V	76,2	197,6	181	4,5
RBS-2633	KOZ-03RBS/11-001111-110/007.00	DC 24 V	14,8	44,0	39	1,0
RBS-2637	KOZ-03RBS/12-001020-110/002.00	DC 6 V	3,6	10,9	10	0,2
RBS-2642	KOZ-03RBS/11-001180-110/007.00	DC 12 V	8,0	22,4	21	0,5

Connection grid

View on soldering side

1 NO / 1 NC (110), Variant 1

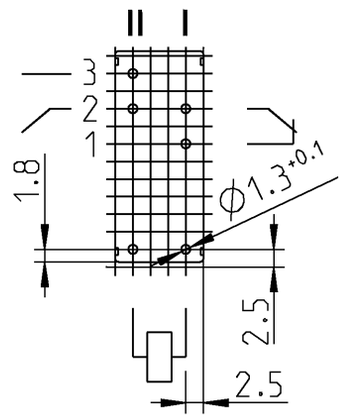

1 NO / 1 NC (110), Variant 2

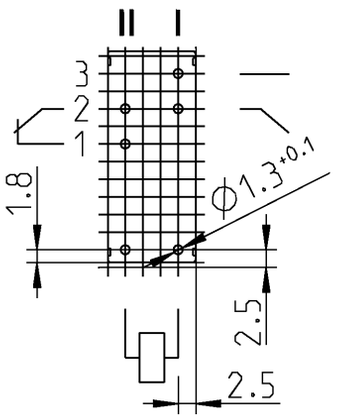

2 CO (002), Variant 3

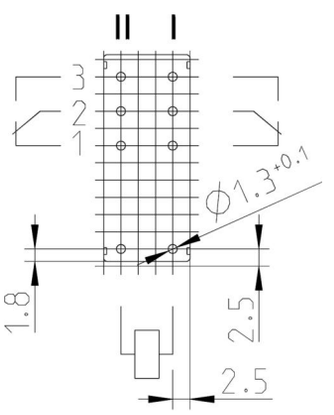

Diagram

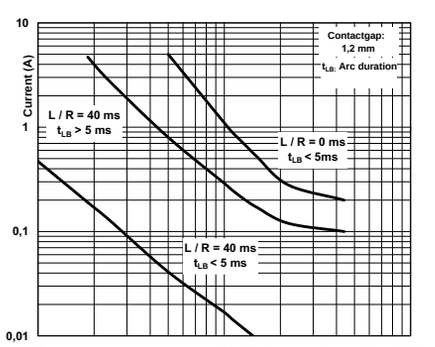

DC- switching capacity

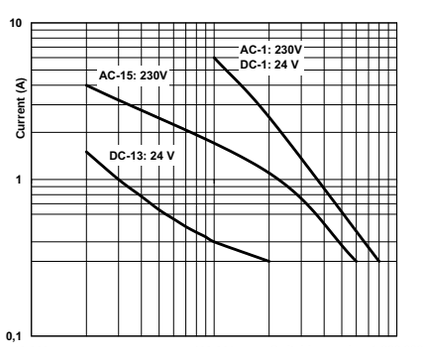

Electrical service life