

TELEDYNE RELAYS

A Unit of Teledyne Electronics and Communications

ESTABLISHED RELIABILITY TO-5 RELAYS

DPDT

SERIES 412

SERIES DESIGNATION	RELAY TYPE
412	DPDT basic relay
412D	DPDT relay with internal diode for coil suppression
412DD	DPDT relay with internal diodes for coil transient suppression and polarity reversal protection
412T	DPDT relay with internal transistor driver and coil transient suppression diode

INTERNAL CONSTRUCTION

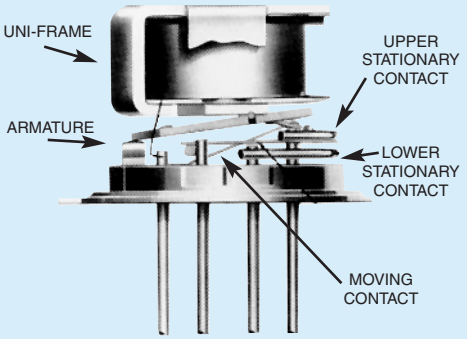

DESCRIPTION

The TO-5 relay, originally conceived and developed by Teledyne, has become one of the industry standards for low-level switching from dry circuit to 1 ampere. Designed expressly for high-density PC board mounting, its small size and low coil power dissipation make the 412 relay one of the most versatile ultraminiature relays available.

The following unique construction features and manufacturing techniques provide excellent resistance to environmental extremes and overall high reliability.

- All welded construction.
- Unique uni-frame design, providing high magnetic efficiency and mechanical rigidity.
- High force/mass ratios for resistance to shock and vibration.
- Advanced cleaning techniques provide maximum assurance of internal cleanliness.
- Precious metal alloy contact material with gold plating assures excellent high current and dry circuit switching capabilities.

The Series 412D and 412DD relays have internal discrete silicon diodes for coil suppression and polarity reversal protection. The hybrid 412T relay features an internal silicon suppression diode and transistor driver. This hybrid package reduces required PC board floor space by reducing the number of external components needed to drive the relay.

By virtue of its inherently low intercontact capacitance and contact circuit losses, the 412 relay has proven to be an excellent ultraminiature RF switch for frequency ranges well into the UHF spectrum. A typical RF application for the TO-5 relay is in handheld radio transceivers, wherein the combined features of good RF performance, small size, low coil power dissipation and high reliability make it a preferred method of T-R switching (see Figure 1).

ENVIRONMENTAL AND PHYSICAL SPECIFICATIONS	
Temperature (Ambient)	–65°C to +125°C
Vibration (General Note 1)	30 g's to 3000 Hz
Shock (General Note 1)	75 g's, 6 msec, half-sine
Acceleration	50 g's
Enclosure	Hermetically sealed
Weight	0.09 oz. (2.55g) max.

©2003 TELEDYNE RELAYS

SERIES 412
GENERAL ELECTRICAL SPECIFICATIONS (–65°C to +125°C unless otherwise noted) (Notes 2 & 3)

Contact Arrangement	2 Form C (DPDT)	
Rated Duty	Continuous	
Contact Resistance	0.1 ohm max. before life; 0.2 ohm max. after life at 1A/28Vdc (measured 1/8" from header)	
Contact Load Ratings (DC) (See Fig. 2 for other DC resistive voltage/current ratings)	Resistive: 1 Amp/28Vdc Inductive: 200 mA/28Vdc (320 mH) Lamp: 100 mA/28Vdc Low Level: 10 to 50 µA/10 to 50mV	
Contact Load Ratings (AC)	Resistive: 250 mA/115Vac, 60 and 400 Hz (Case not grounded) 100 mA/115Vac, 60 and 400 Hz (Case grounded)	
Contact Life Ratings	10,000,000 cycles (typical) at low level 1,000,000 cycles (typical) at 0.5A/28Vdc resistive 100,000 cycles min. at all other loads specified above	
Contact Overload Rating	2A/28Vdc Resistive (100 cycles min.)	
Contact Carry Rating	Contact factory	
Coil Operating Power	450 milliwatts typical at nominal rated voltage @ 25°C	
Operate Time	2.0 msec max. at nominal rated coil voltage	
Release Time	412 Series: 1.5 msec max. 412D, 412DD Series: 4.0 msec max. 412T Series: 7.5 msec max.	
Contact Bounce	1.5 msec max.	
Intercontact Capacitance	0.4 pf typical	
Insulation Resistance	10,000 megohms min. between mutually isolated terminals	
Dielectric Strength	Atmospheric pressure: 500 Vrms/60Hz	70,000 ft.: 125 Vrms/60Hz
Negative Coil Transient (Vdc)	412D, 412DD, 412T	1.0 max
Diode P.I.V. (Vdc)	412D, 412DD, 412T	100 min.
412T Transistor Characteristics	**Base Turn Off Voltage (Vdc)**	0.3 min.
	Emitter-base breakdown Voltage (BVEBO) (@25°C) (Vdc)	6.0 min.
	Collector-base breakdown Voltage (BVEBO) (@25°C & Ic = 100 µA) (Vdc)	75 min.

DETAILED ELECTRICAL SPECIFICATIONS (–65°C to +125°C unless otherwise noted) (Note 3)

BASE PART NUMBERS (See Note 10 for full P/N example)			**412-5 412D-5 412DD-5 412T-5**	**412-6 412D-6 412DD-6 412T-6**	**412-9 412D-9 412DD-9 412T-9**	**412-12 412D-12 412DD-12 412T-12**	**412-18 412D-18 412DD-18 412T-18**	**412-26 412D-26 412DD-26 412T-26**
Coil Voltage (Vdc)	Nom.		5.0	6.0	9.0	12.0	18.0	26.5
	Max.		5.8	8.0	12.0	16.0	24.0	32.0
Coil Resistance (Ohms ±10% @25°C)	412, 412D, 412T (Note 4)		50	98	220	390	880	1560
	412DD (Note 4)		39	78	220	390	880	1560
Coil Current (mAdc @25°C) (412DD Series)		Min.	93.2	58.3	33.0	25.6	17.5	14.8
		Max.	128.2	78.3	42.9	32.8	22.1	18.5
Coil Current (mAdc @25°C) (412T Series)	(Note 7)	Min.	82.2	52.9	35.3	26.6	17.9	14.7
		Max.	112.1	69.9	47.4	35.8	24.0	19.8
Pick-up Voltage (Vdc, Max.)	412, 412D		3.5	4.5	6.8	9.0	13.5	18.0
	412DD		3.9	5.2	7.8	10.0	14.5	19.0
	412T (Note 7)		3.5	4.5	6.8	9.0	13.5	18.0
Base Current to Turn On (mAdc, Max.) (412T Series) (Note 7)			3.00	2.04	1.36	1.03	0.68	0.50
Drop-out Voltage (Vdc)	412, 412D, 412T	Min.	0.14	0.18	0.35	0.41	0.59	0.89
		Max.	2.3	3.2	4.9	6.5	10.0	13.0
	412DD	Min.	0.6	0.7	0.8	0.9	1.1	1.4
		Max.	2.8	3.4	5.3	6.5	10.0	13.0

PERFORMANCE CURVES (NOTE 2)

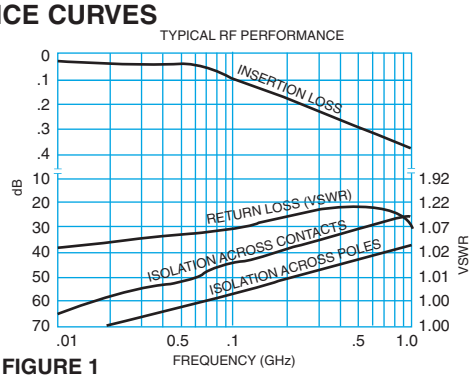

FIGURE 1

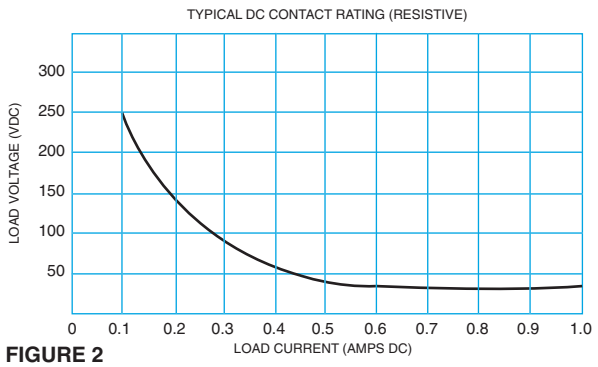

FIGURE 2

ESTABLISHED RELIABILITY

SPECIFICATIONS ARE SUBJECT TO CHANGE WITHOUT NOTICE
www.teledynerelays.com
©2003 TELEDYNE RELAYS
412/1203/Q1

SERIES 412

OUTLINE DIMENSIONS

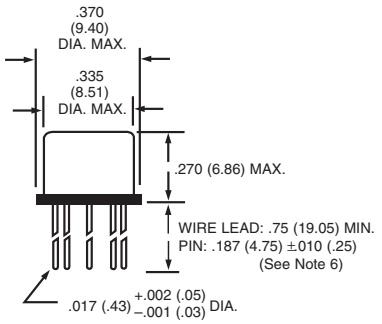

TERMINAL LOCATIONS AND PIN NUMBERING (REF. ONLY)
(Viewed from Terminals)

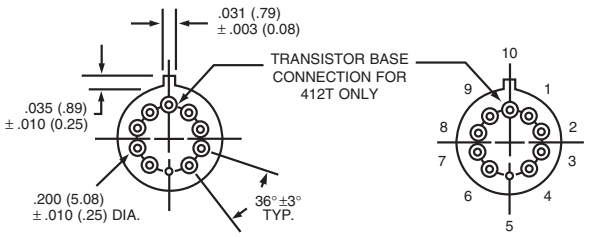

DIMENSIONS ARE SHOWN IN INCHES (MILLIMETERS)

SCHEMATIC DIAGRAMS

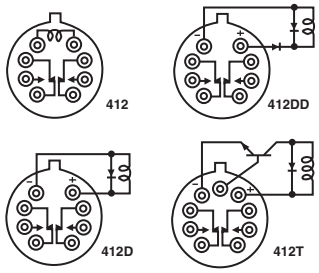

SCHEMATICS ARE VIEWED
FROM TERMINALS

GENERAL NOTES

1. Relay contacts will exhibit no chatter in excess of 10 µsec or transfer in excess of 1 µsec.
2. "Typical" characteristics are based on available data and are best estimates. No on-going verification tests are performed.
3. Unless otherwise specified, parameters are initial values.
4. For reference only. Coil resistance not directly measurable at relay terminals due to internal series semiconductor. 412DD and 412T only.
5. Unless otherwise specified, relays will be supplied with either gold-plated or solder-coated leads.
6. The slash and characters appearing after the slash are not marked on the relay.
7. Limit Base Emitter current to 15 mAdc.
8. Applicable to all coil voltages. See Base current to turn on.
9. Screened HI-REL versions available. Contact factory.
10.

TYPICAL LOGIC INTERFACE

(See Note 8)

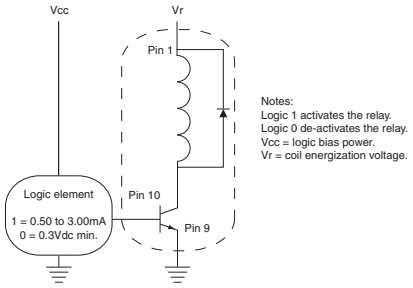

Teledyne Part Numbering System for $T^2R^®$ Established Reliability Relay

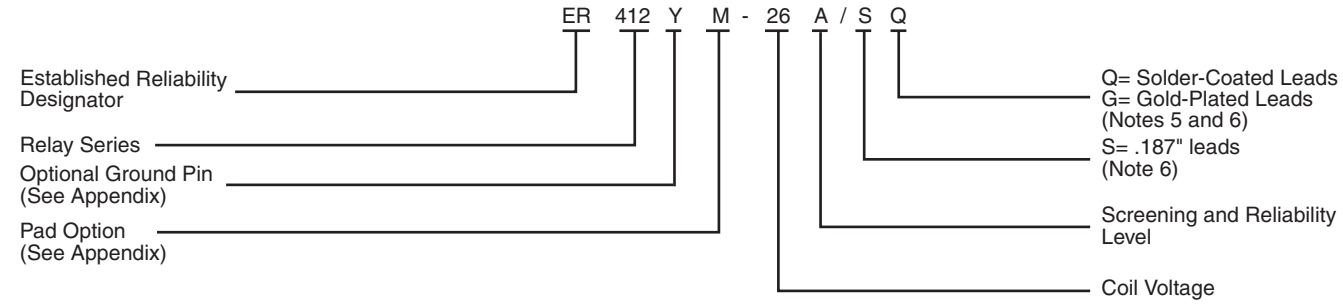

Teledyne Part Numbering System for Military Qualified (JAN) Relays

