AC3226

AS-Interface repeater

SmartL25 AS-i Repeater III

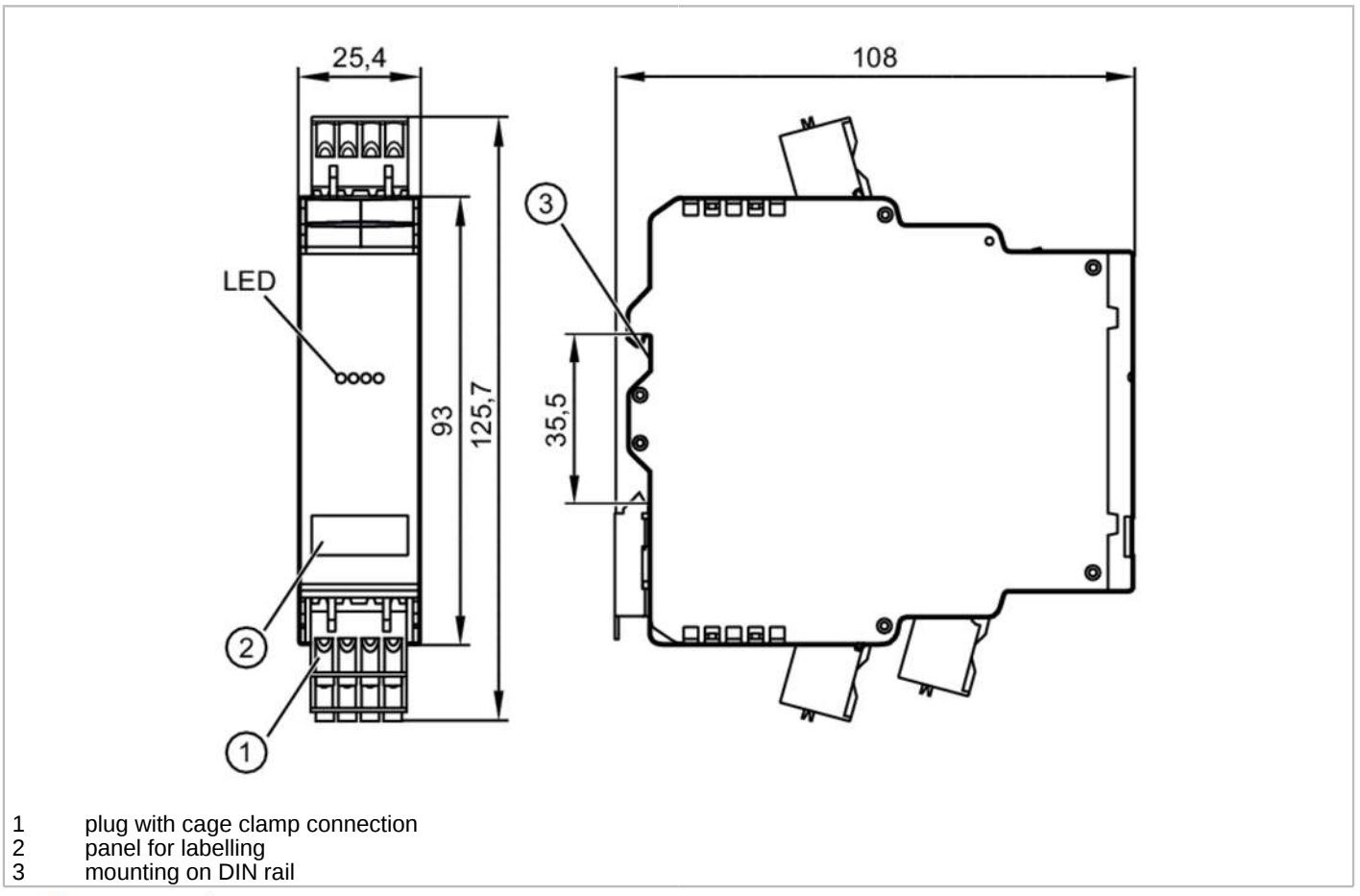

1 plug with cage clamp connection
2 panel for labelling
3 mounting on DIN rail

Application		
Application		extension of the AS-i network by another 100 m
Electrical data		
Operating voltage	[V]	26.5...31.6 DC
Max. current consumption from AS-i	[mA]	60; (per AS-i line)
Outputs		
Electrical design		AS-i
Electrically separated		yes
Operating conditions		
Ambient temperature	[°C]	-25...70
Note on ambient temperature		cULus: ... 65 °C
Storage temperature	[°C]	-25...75
Max. relative air humidity	[%]	90; (non condensing)
Max. height above sea level	[m]	2000
Protection		IP 20
Pollution degree		2
Tests / approvals		
EMC		EN 62026-2

AC3226

AS-Interface repeater

SmartL25 AS-i Repeater III

UL approval		Ta	-25...70 °C
		Enclosure type	IP20
		power supply	Low Voltage / Limited Energy
		File number UL	E205959
Mechanical data			
Weight	[g]	170	
Type of mounting		mounting on DIN rail	
Materials		PA 6.6	
Displays / operating elements			
Display		operation	2 x LED, green
		function	LED, yellow
Accessories			
Items supplied		COMBICON connectors	
		Link for bus termination	
Remarks			
Pack quantity		1 pcs.	

AC3226

AS-Interface repeater

SmartL25 AS-i Repeater III

Electrical connection

Connection

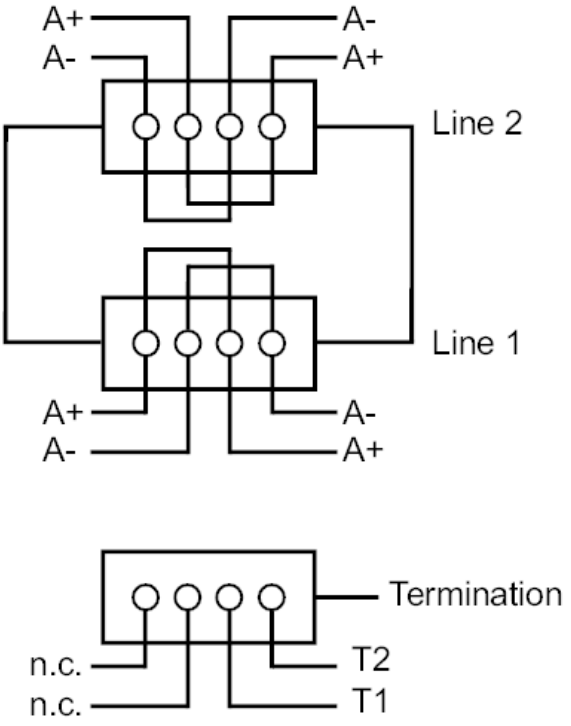

	outgoing AS-i cable
A2-	AS-i - line 2
A2+	AS-i + line 2
A2-	AS-i - line 2
A2+	AS-i + line 2
	incoming AS-i cable
A1+	AS-i + line 1
A1-	AS-i - line 1
A1+	AS-i + line 1
A1-	AS-i - line 1
T1	Link for bus termination
T2	Link for bus termination