12,1" industrial display



- 12,1" brilliant TFT-LCD graphic display, 1280 x 800 Pixel
- Robust aluminium housing, low installation depth
- High protection class IP65, flush-mounted design
- HDMI, DVI and VGA interface

Description

The industrial displays in sizes from 10.1" to 23.8" are optionally available with projected capacitive touch, resitive touch or without touch.
The front of the housing is IP65 rated and, thanks to the specially designed aluminium housing, has a very compact and robust design. The low installation depth means that the displays can be used almost anywhere.

Product details

Power supply:	12 VDC to 36 VDC
Power consumption:	typical power consumption: 18 W maximum power consumption: 48 W
Display:	12,1" TFT-LCD
Resolution:	1920 x 1080 pixels
Aspect ratio:	16:10
Brightness:	300 cd/m²
Colours:	16,7 million
View angle:	H: 85° / V: 85°
Touchscreen:	• projected capacitive touch • without touch
Glas hardness:	6H
I/O ports:	USB: RJ45-USB for touch Display: 1x HDMI, 1x DVI, 1x VGA Audio output: 3,5 mm
Housing:	Robust aluminum case
Mounting:	VESA 100 x 100 and/or 75 x 75 Panel mount
Protection class:	IP65 from the front
Weight:	approx. 2,5 kg
Dimensions (WxHxD):	330 mm x 227,3 mm x 53,5 mm
Environmental conditions:	Operation: -10 °C to +65 °C Storage: -20 °C to +75 °C 10 % to 80 %.rFn at 40 °C, non condensing
Certification:	CE FCC Class A CCC
Packing list:	1x Display 1x Embedded brackets 1x RJ-45 to USB cable 1x VGA cable
Customs tariff number:	85285210
Manufacturer:	Wachendorff Prozesstechnik

Order-No. Product	
DPL002-121N002P	12,1" industrial display, without touch

Order-No. Accessories	
360.017.000.012	Power cord for ext. power supply
BZ.36.010.2000022	External power supply, 230 VAC to 12 VDC
JWS-ZJ01	Industrial monitor/display stand, VESA 100x100, black
JWS-ZJ02	Industrial monitor/display stand, VESA 100x100, silver

Drawings

Dimensions (mm) and STL-Data/Viewer:

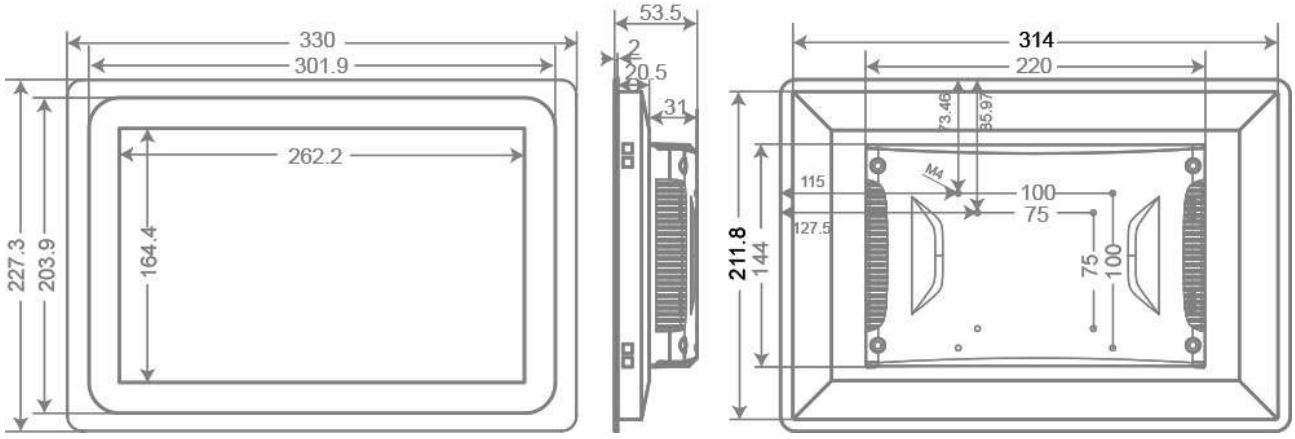

WACHENDORFF
Prozesstechnik GmbH & Co. KG

Wachendorff Prozesstechnik GmbH & Co. KG
Industriestrasse 7 • 65366 Geisenheim
Germany

Tel: +49 (0) 67 22 / 99 65 - 20
E-Mail: wp@wachendorff.de
www.wachendorff-prozesstechnik.de