SONFL1X Alarm Horn & Xenon Strobe Beacon

The SONFL1X features the 100dB(A) SONF1 alarm horn sounder combined with the L101X Xenon strobe beacon. The compact, robust housing is ideal for all general signalling applications including fire, security and process control.

The 5 Joule Xenon strobe generates over 200 candela of light output. DC versions have multiple flash rates selectable during installation. Sounder & beacon may be connected from a single supply for simultaneous operation or from separate supplies for independent operation.

Features

- Automatic synchronisation on multi-sounder system.
- High output Xenon beacon
- DC voltage units feature multiple flash rates.
- Continuously rated.
- Stainless steel fixings.
- Mounting via internal BESA compatible fixing positions or via external mounting lugs.
- Duplicate cable terminations (in & out for daisy-chain installations).
- Tropicalisation available on request.
- Available with custom tone configurations and frequencies.

Approvals

- VdS approved: EN54-3 and EN54-23 (CPR 305/2011/EU).
- UL & cULus approved: General signalling use.
- GOST-R approved. Cert: POCC GB-JB05-H00144.
- Marine Equipment Directive (MED) Certificate: MEDB00001EH





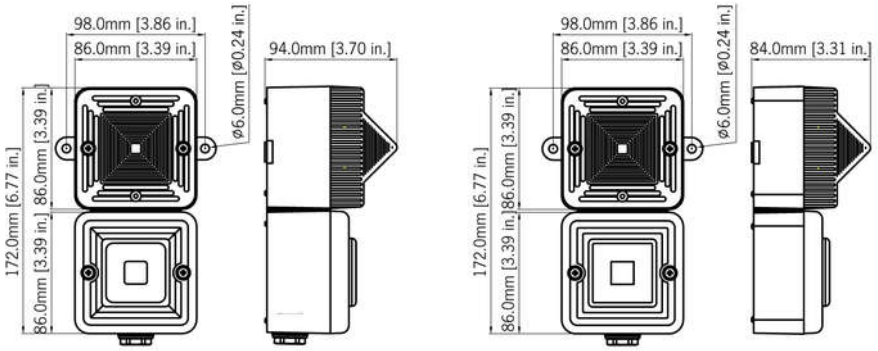

Specification

Sounder:	
Maximum output:	100dB(A) @ 1 metre [91dB(A) @ 10ft/3m]
Nominal output:	99dB(A) @ 1m +/- 3dB – Tone 1 [90dB(A) @ 10ft/3m]
No. of tones:	10 (UKOOA / PFEER compliant)
No. of stages:	2
Volume control:	On board potentiometer
Effective range:	30m/99ft @ 1KHz
Beacon:	
Energy:	5 Joules (5Ws)
Flash rate:	1Hz (60 fpm)
Peak Candela:	500,000 cd – calculated from energy (J)
Effective Intensity:	250 cd – calculated from energy (J)
Peak Candela:	86,935 cd* – measured ref. to I.E.S.
Effective Intensity:	200 cd* – measured ref. to I.E.S.
Lens colours:	Amber, Blue, Clear, Green, Magenta, Red & Yellow
Tube life:	Emissions are reduced to 70% after 5 million flashes
General:	
Voltages DC:	12Vdc; 24V dc
Voltages AC:	24V ac; 115V ac; 230V ac
Ingress protection:	IP66
Housing material:	High impact UL94 V0 & 5VA FR ABS
Colour:	Red (RAL3000), grey (RAL7038) & white.
Lens material:	PC
Cable entries:	4 x M20 clearance gland knockouts in side & back
Terminals:	0.5 to 1.5mm² cables.
Operating temp:	-25 to +55°C [-13° to +131°F]
Storage temp:	-40 to +70°C [-40° to +158°F]
Relative humidity:	90% at 20°C [68°F]
Weight:	0.50kg/1.1lbs

*SPL data +/-3dB(A). Measured at optimum voltage.

*Candela measurements representative of performance with clear lens at optimum voltage.

Part Codes

Version:	Part code:
12V dc	SONFL1XDC012[x]/[y]
24V dc	SONFL1XDC024[x]/[y]
24V ac	SONFL1XAC024[x]/[y]
115V ac	SONFL1XAC115[x]/[y]
230V ac	SONFL1XAC230[x]/[y]
[x] = Enclosure colour:	G: Grey (RAL7038) R: Red (RAL3000) W: White
y] = Lens colour:	A: Amber B: Blue C: Clear G: Green M: Magenta R: Red Y: Yellow

Suffix part number with '-UL' for UL approved version.

Suffix part number with '-M' for MED approved version [24V dc unit, Clear lens only]

CPR – EN54-3 & EN54-23:	
Part code:	SONFL1XDC024[x]/C
Environmental class:	Type B – for outdoor use
Visual range:	Category W-2.4-4.8
Signal colour:	Clear (1Hz)

Alarm Sounder

Version:	Voltage:	Current :
12V dc	10-30V dc	25mA*
24V dc	10-30V dc	25mA*
24V ac 50/60Hz	+/-10%	40mA
115V ac 50/60Hz	+/-10%	13mA
230V ac 50/60Hz	+/-10%	13mA

* current at nominal voltage on Tone 2

Xenon Beacon

Version:	Voltage:	Current:
12V dc	10-14V dc	500mA
24V dc	20-28V dc	250mA
24V ac 50/60Hz	+/-10%	300mA
115V ac 50/60Hz	+/-10%	70mA

Tone table

S 1	Description	S 2
T 2	500/1200Hz @ 0.3Hz 0.5 sec Slow Whoop	T 1
T 3	1200/500Hz @ 1Hz - DIN / PFEER P.T.A.P.	T 8
T 4	544Hz (100mS)/440Hz (400mS) - NF S 32-001	T 9
T 5	Bell	T 1
T 6	800/1000Hz @ 7Hz Sweeping	T 8
T 7	500-1200Hz 3.75sec /0.25sec. Australian Evac.	T 10
T 8	\2.1000Hz Continuous - PFEER Toxic Gas	
T 9	\2.Continuous 554Hz	
T 10	\2.420Hz @ 0.625 sec Australian Alert	
\4.AC Version (Single stage only):		
S1	\2.Description	
T 1	\2.800/1000Hz @ 0.25 sec Alternating	
T 2	\2.500/1200Hz @ 0.3Hz 0.5 sec Slow Whoop	
T 3	\2.1200/500Hz @ 1Hz - DIN / PFEER P.T.A.P.	
T 4	\2.544Hz (100mS)/440Hz (400mS) - NF S 32-001	
T 5	\2.1000Hz Continuous - PFEER Toxic Gas	
T 6	\2.Bell	
T 7	\2.800/1000Hz @ 7Hz Sweeping	
T 8	\2.2400/2900Hz @ 50Hz Sweeping	
T 9	\2.420Hz @ 0.625 sec Australian Alert	
T 10	\2.500-1200Hz 3.75sec /0.25sec. Australian Evac.	

No liability is accepted for any consequence of the use of this document. The technical specification of this unit is subject to change without notice due to our policy of continual product development. All dimensions are approximate. This unit is sold subject to our standard conditions of sale, a copy of which is available on request.