Machine Safety
Decoupling Box
TBSB-I1-CS04

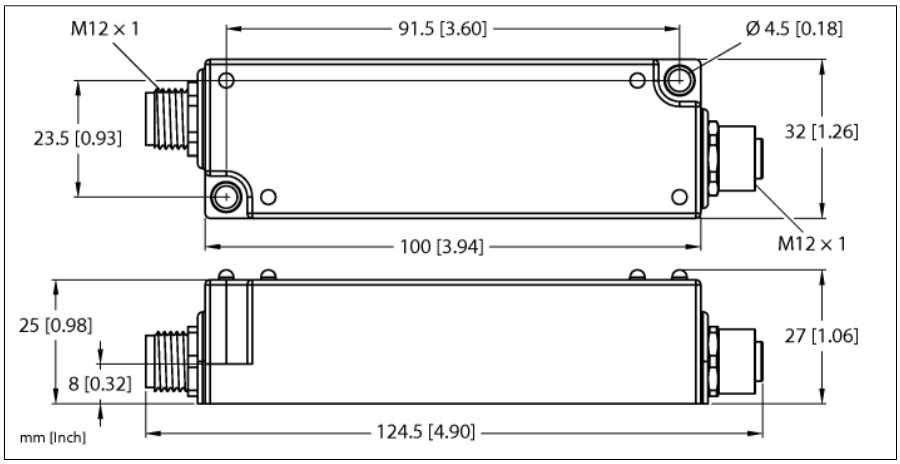

- **Polycarbonate/ABS**
- **Input connector M12 A coded for safety-related decoupling of OSSD outputs via mechanical contacts**
- **Electromechanical switch box for decoupling OSSD signals with potential-free contacts**
- **Switching off of outputs, M12 X1 input PIN 4 and PIN 2 via external safety module**
- **EDM feedback circuit for monitoring, M12 output PIN 5 via external safety module**
- **Shutdown with potential-free contacts up to PLe according to EN ISO 13849-1 via M12 X2 contact 1 PIN 1 and PIN 4, contact 2 PIN 2 and PIN 5**

Type designation	TBSB-I1-CS04
Ident no.	100012761
Supply	
Supply voltage	24 VDC
Admissible range	19.2…27.6 VDC
System power supply	24 VDC
Operating current	4000 mA
Electrical isolation	Galvanic isolation between OSSD signal input and output, contact-based
Power dissipation, typical	≤ 6 W
Safety Data	
	B10d = 90.000 cycles contactor with nominal load conforming to EN/ISO 13849-1
PL acc. to DIN EN 13849-1:2008	e
Category acc. to DIN EN 13849-1:2008	4
DC acc. to ISO 13849-1:2008	0-99
SIL according IEC 61508	3
Useful Lifetime	20 years
Max. power on time	20 cyc/h
Connectivity inputs	M12, 5-pin
Connectivity outputs	M12, 5-pol
Standard/Directive conformity	
Directive	2006/42/EC Machine Directive 2014/35/EC Low Voltage Directive 2014/30/EC EMC Directive
Shock test	acc. to EN 60068-2-27
Drop and topple	acc. to IEC 60068-2-31/IEC 60068-2-32
General Information	
Ambient temperature	-25…+40 °C
Storage temperature	-25…+50 °C
Altitude	max. 2000 m
Protection class	IP67
Housing material	Policarbonate/ABS
Ground label material	Polycarbonate/ABS
Halogen-free	yes
Mounting	Cast housing

Edition • 2021-08-18T17:52:49+02:00

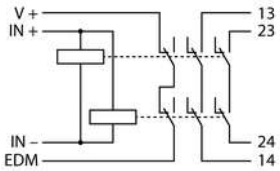	**Note** Circuit diagram	
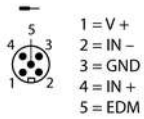	**Note** Input interconnection M12 A coded, with shutdown via PIN 4 and PIN 2 and feedback EDM via PIN 1 and PIN 5. PIN 3 GND	
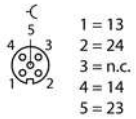	**Note** Output of first channel pins 1/13 and 4/14, second channel pins 5/23 and 2/24	

Edition • 2021-08-18T17:52:49+02:00