ecomat300

AC5208

ClassicLine 4DO-Y IP67

Bus system AS-Interface

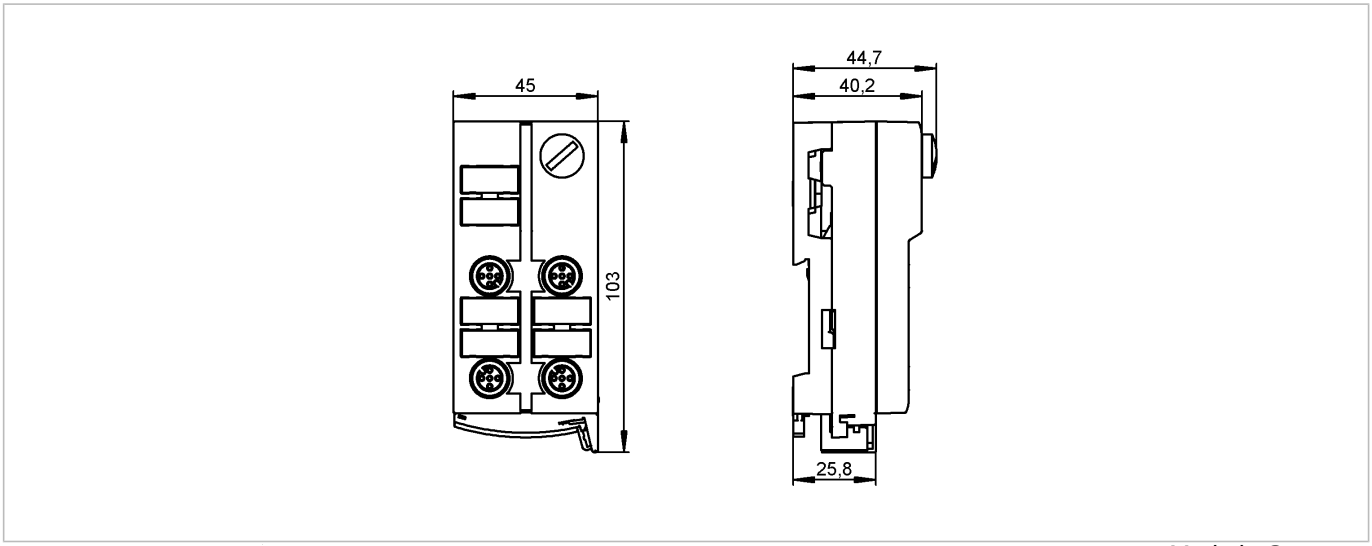

Made in Germany

Product characteristics

Active ClassicLine module

AS-i flat cable connection

Sockets M12 x 1

Addressing socket

Three orientations of the flat cable are possible

Digital outputs

Electrical data

Electrical design		4 outputs
Operating voltage	[V]	26.5...31.6 DC; "supply class 2" to cULus.
Total current consumption from AS-i	[mA]	< 50
Max. current load per module	[mA]	2000

Outputs

Digital

Output function		transistor PNP
Voltage range	[V]	24 DC (15...30 DC) **)
External voltage supply		according to PELV
Max. current load per output	[mA]	1000 *)
Electrically separated		yes
Integrated watchdog		yes
Short-circuit proof		yes

Environment

Ambient temperature	[°C]	-25...70
Protection		IP 67

Tests / approvals

EMC		EN 50295 IEC 61000-6-2
MTTF	[Years]	211

AS-i classification

Extended addressing mode possible	version 2.11 and 3.0 / no

ecomat300

AC5208

ClassicLine 4DO-Y IP67

Bus system AS-Interface

AS-i profile	S-8.0.E
I/O configuration [hex]	8
ID code [Hex]	0.E
AS-i certificate	in preparation

Data bits

Data bit	**D0**	**D1**	**D2**	**D3**
Output	1	2	3	4
Socket	O-1/2	O1/2 O-2	O-3/4	O-3/4 O-4
Pin	4	2 4	4	2 4

Mechanical data

Housing materials		PA
Weight	[kg]	0.181

Displays / operating elements

Operation	LED	green
Error	LED	red
Function display	LED	yellow

Electrical connection

Wiring

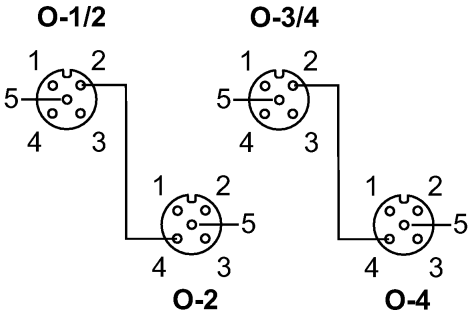

Outputs

Socket O-1/2
1: not used
2: Switching output 2
3: External voltage AUX -
4: Switching output 1
5: not used

Socket O-2
1: not used
2: not used
3: External voltage AUX -
4: Switching output 2
5: not used

Socket O-3/4
1: not used
2: Switching output 4
3: External voltage AUX -
4: Switching output 3
5: not used

Socket O-4
1: not used
2: not used
3: External voltage AUX -
4: Switching output 4
5: not used

Accessories

Accessories (included)	lower part
Accessories (optional)	M12 protective cap (E73004)

Remarks

Remarks

*) Utilisation category (DC13): The switch-on and switch-off capacity for the triggering of solenoids is rated up to 20 W (to IEC 60947-5-1)
**) via flat cable

Pack quantity	[piece]	1