DATASHEET - HI11-P1/P3E



Auxiliary contact, 1 N/O, 1 NC, For use with P1, P3, Flush mounting

Part no. HI11-P1/P3E
Catalog No. 061813

EL-Nummer (Norway) 1456548

Delivery program

Product range			Accessories
Basic function			Auxiliary contact
Part group reference			P1 P3
			Late-break switching-on behavior, early-make switching-off behavior The N/O is always connected as a load-shedding contact. For left and/or right side mounting
Contacts			
N/O = Normally open			1 N/O
N/C = Normally closed			1 NC
For use with			P1-…/E, …/EA…, …/EZ P3-…/E, …/EA
For use with			P1, P3, Flush mounting
Rated uninterrupted current	I_u	A	10

Technical data

Auxiliary contacts

Standards			Control circuit isolator to IEC/EN 60947-5
Rated insulation voltage	U_i	V AC	
Rated insulation voltage	U_i	V AC	500
Rated uninterrupted current	I_u	A	
Rated uninterrupted current	I_u	A	10
Rated operational current	I_e	A	
AC-15			
230 V	I_e	A	
AC-15 with 230 V	I_e	A	6
DC-13	I_e		
125 V	I_e	A	1.1
250 V	I_e	A	0.55
Short-circuit rating			
Maximum fuse		A gG/gL	10
Terminal capacities		mm^2	
Solid		mm^2	1 x 0.75 - 2.5 2 x 0.75 - 1.5
Flexible with ferrules to DIN 46228		mm^2	1 x 0.5 - 1.5 2 x 0.5 - 1.5
Stripping length		mm	7.5
Tightening torque		Nm	1
Control circuit reliability at 24 V DC, 10 mA	Fault probability	H_F	< 10-5, < 1 failure in 100000 operations

Design verification as per IEC/EN 61439

Technical data for design verification			
Rated operational current for specified heat dissipation	I_n	A	6
Heat dissipation per pole, current-dependent	P_{vid}	W	0.11
Equipment heat dissipation, current-dependent	P_{vid}	W	0
Static heat dissipation, non-current-dependent	P_{vs}	W	0
Heat dissipation capacity	P_{diss}	W	0

Operating ambient temperature min.	°C	-25
Operating ambient temperature max.	°C	50
IEC/EN 61439 design verification		
10.2 Strength of materials and parts		
10.2.2 Corrosion resistance		Meets the product standard's requirements.
10.2.3.1 Verification of thermal stability of enclosures		Meets the product standard's requirements.
10.2.3.2 Verification of resistance of insulating materials to normal heat		Meets the product standard's requirements.
10.2.3.3 Verification of resistance of insulating materials to abnormal heat and fire due to internal electric effects		Meets the product standard's requirements.
10.2.4 Resistance to ultra-violet (UV) radiation		Meets the product standard's requirements.
10.2.5 Lifting		Does not apply, since the entire switchgear needs to be evaluated.
10.2.6 Mechanical impact		Does not apply, since the entire switchgear needs to be evaluated.
10.2.7 Inscriptions		Meets the product standard's requirements.
10.3 Degree of protection of ASSEMBLIES		Does not apply, since the entire switchgear needs to be evaluated.
10.4 Clearances and creepage distances		Meets the product standard's requirements.
10.5 Protection against electric shock		Does not apply, since the entire switchgear needs to be evaluated.
10.6 Incorporation of switching devices and components		Does not apply, since the entire switchgear needs to be evaluated.
10.7 Internal electrical circuits and connections		Is the panel builder's responsibility.
10.8 Connections for external conductors		Is the panel builder's responsibility.
10.9 Insulation properties		
10.9.2 Power-frequency electric strength		Is the panel builder's responsibility.
10.9.3 Impulse withstand voltage		Is the panel builder's responsibility.
10.9.4 Testing of enclosures made of insulating material		Is the panel builder's responsibility.
10.10 Temperature rise		The panel builder is responsible for the temperature rise calculation. Eaton will provide heat dissipation data for the devices.
10.11 Short-circuit rating		Is the panel builder's responsibility. The specifications for the switchgear must be observed.
10.12 Electromagnetic compatibility		Is the panel builder's responsibility. The specifications for the switchgear must be observed.
10.13 Mechanical function		The device meets the requirements, provided the information in the instruction leaflet (IL) is observed.

Technical data ETIM 7.0

Low-voltage industrial components (EG000017) / Auxiliary contact block (EC000041)

Electric engineering, automation, process control engineering / Low-voltage switch technology / Component for low-voltage switching technology / Auxiliary switch block (ecl@ss10.0.1-27-37-13-02 [AKN342013])

Number of contacts as change-over contact		0
Number of contacts as normally open contact		1
Number of contacts as normally closed contact		1
Number of fault-signal switches		0
Rated operation current Ie at AC-15, 230 V	A	6
Type of electric connection		Screw connection
Model		Top mounting
Mounting method		Side mounting
Lamp holder		Other

Approvals

Product Standards	UL 508; CSA-C22.2 No. 14-05; IEC/EN 60947-5; CE marking
UL File No.	E36332
UL Category Control No.	NLRV
CSA File No.	12528
CSA Class No.	3211-05
North America Certification	UL listed, CSA certified

Dimensions

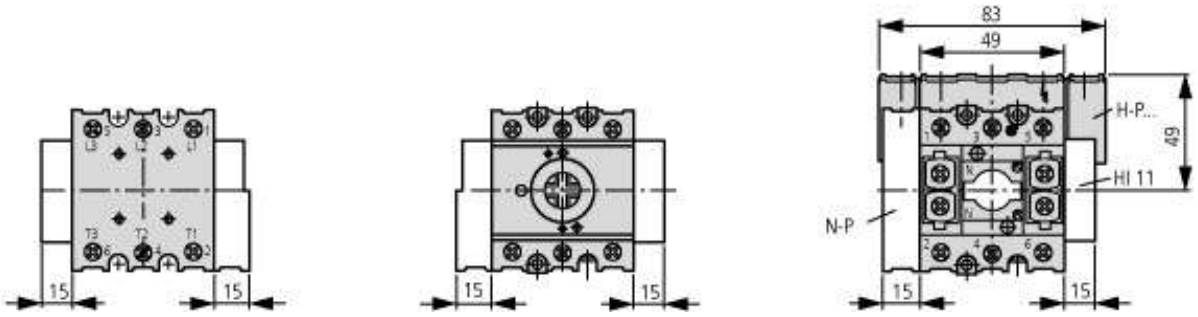

P1

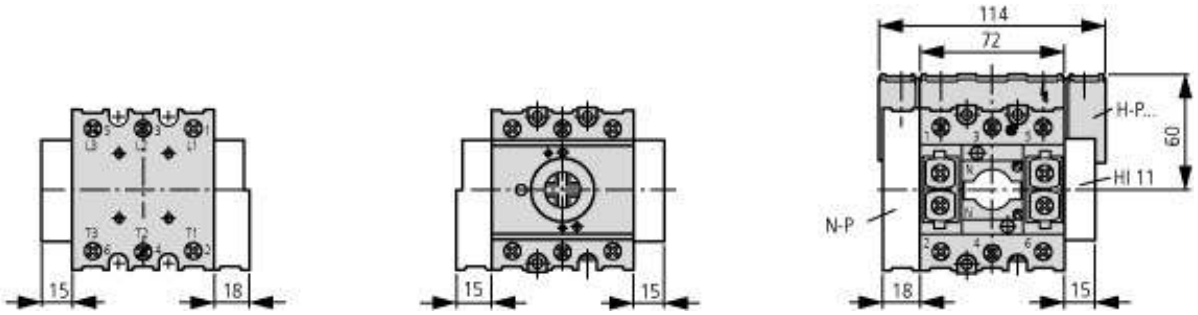

P3

Additional product information (links)

Technical overview cam switch, switch-disconnector	http://de.ecat.moeller.net/flip-cat/?edition=HPLTEv1&startpage=4.2
System overview cam switch T	http://de.ecat.moeller.net/flip-cat/?edition=HPLTEv1&startpage=4.4
System overview switch-disconnector P	http://de.ecat.moeller.net/flip-cat/?edition=HPLTEv1&startpage=4.6
Key to part numbers Cam switch	http://de.ecat.moeller.net/flip-cat/?edition=HPLTEv1&startpage=4.8
Key to part numbers Switch-disconnector	http://de.ecat.moeller.net/flip-cat/?edition=HPLTEv1&startpage=4.8
Switches for ATEX	http://www.coopercrouse-hinds.eu/en/products/25-ex-safety-and-main-current-switches.html

© 05/2021 by Eaton Industries GmbH