WWW.TENGTOOLS.COM



TORQUE MULTIPLIER 1:3 1/2"F - 3/4"M

- Ideal for tightening and loosening nuts and bolts where extra torque is required
- Supplied in a handy carrying case

Torque Multiplier 1/2" F:3/4" M 1,500Nm

General information

Country of origin: Taiwan
Barcode: 5020385030954
Tarriff code Europe: 8205598000
ECCN US: EAR99
UNSPSC: 27111715

Dimensions

Net weight (g): 2237

Attributes

Product type: Torque Multipliers
Certificates: N/A
Drive: 1/2"
Drive 2: 3/4"
Max torque (Nm): 1500
Max torque (ft-lb): 1100
Ratio: 1:3
Diameter (mm): 69

Features

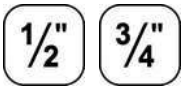

Technical changes and errors may occur. 01-08-2024 19:56

DESIGNED IN SWEDEN

TengTools is a Swedish company present in more than 30 markets worldwide, and offers hand tools in smart storage solutions for demanding professionals within the automotive, maintenance and engineering sectors, as well as motor sport enthusiasts who aspire to use the same tools as top mechanics across the globe.

Sandbergsvägen 3
441 39 Alingsås, Sweden

1500Nm TORQUE MULTIPLIER

Exploded View 12207-0105

Stock No. MP1400

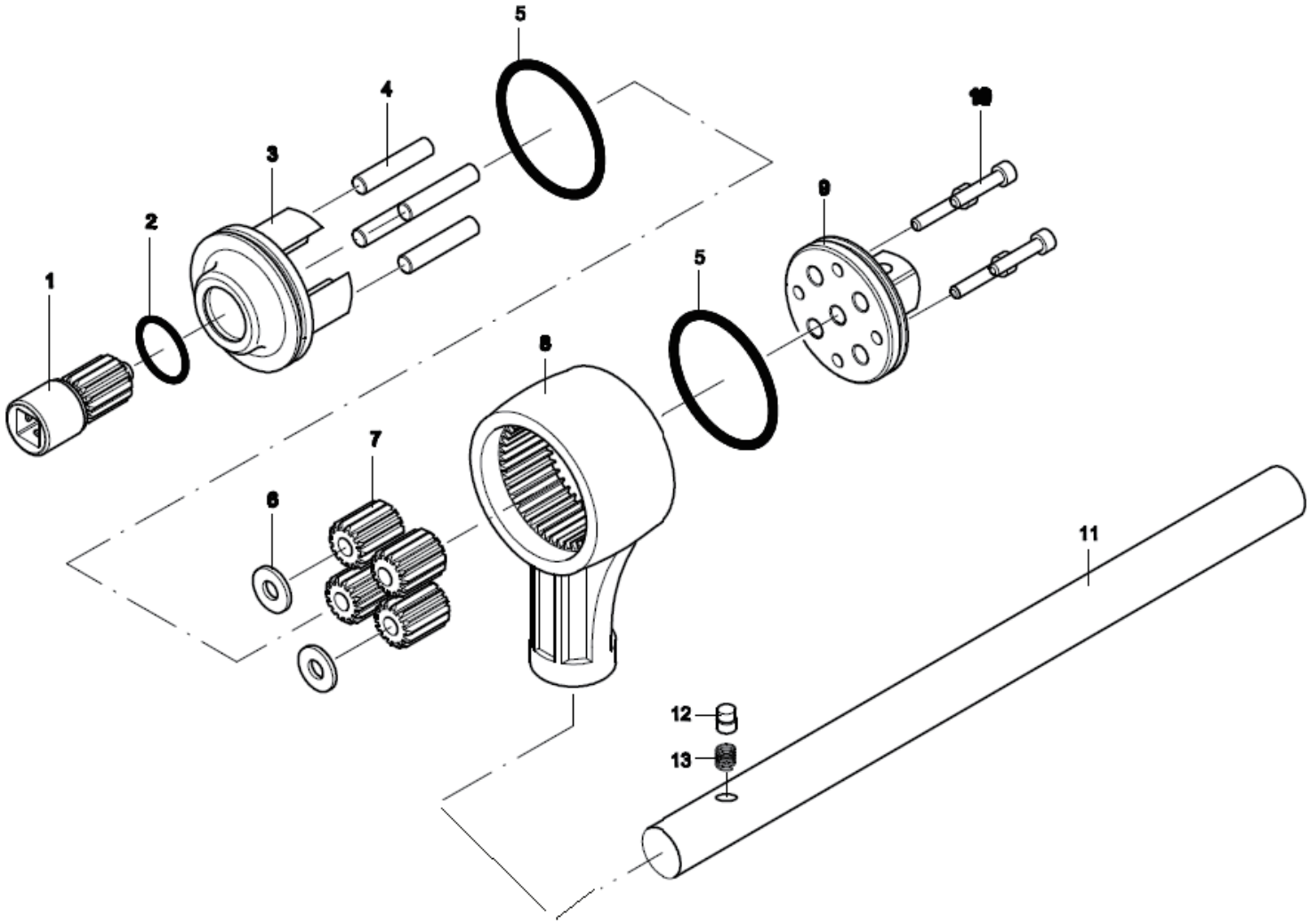

Pos. No.	Parts	Sparepart no.	Repair kit
1	Idle Gear	MPP1401-1	MP1400RK-1
2	O ring	MPP1402	MP1400RK-1
3	Gear cover	MPP1403	MP1400RK-1
4	Pin	MPP1404	MP1400RK-1
5	O ring	MPP1405	MP1400RK-1
6	Washer	MPP1406	MP1400RK-1
7	Gear	MPP1407-1	MP1400RK-1
8	Body	MPP1408-1	
9	Anvil	MPP1409	
10	Screw	MPP1410	
11	Handle	MPP1411	
12	Pin	MPP1412	
13	Spring	MPP1413	
14	Leg	MPSL02	
15	screw	MPP2715	