Brand of NTN corporation

Technical data

UKP320H

Bearing units



Grey cast housing, radial insert ball bearing with adapter sleeve,seal with slinger

KIT CONTENT

UK320G2H, P320

VISUAL (S)

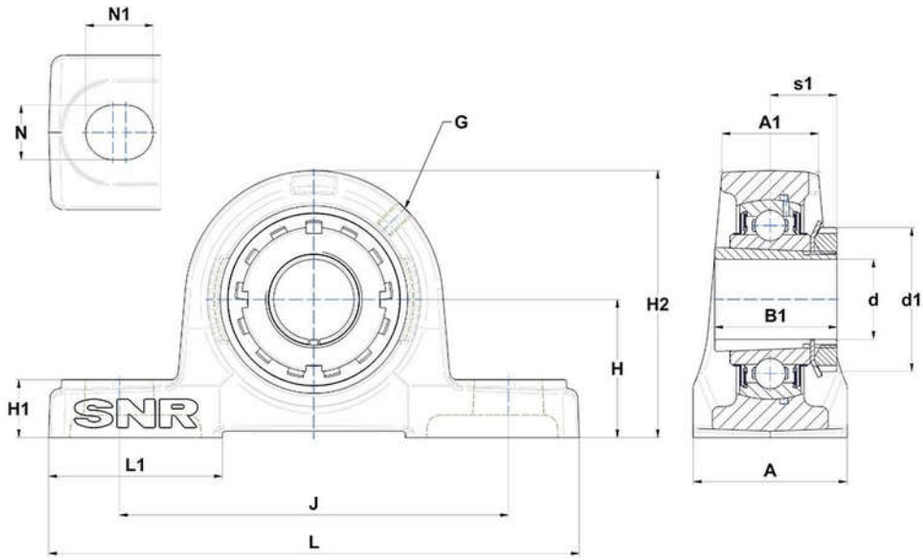

PRODUCT DEFINITION

Brand	SNR
A - Housing width	120 mm
A1 - Housing top width	81 mm
B - Width of Inner Ring	68 mm
d - Shaft diameter	90 mm
d1 - Outer dia of eccent. Lock. collar / nut of adapter sleeve	130 mm

NTN Europe
1 rue des Usines · BP 2017 · 74010 Annecy Cedex · France · Tel. +33 (0)4 50 65 30 00
S.A. au capital de 322 639 919 € · RCS ANNECY B 325 821 072 · Id. Fiscale : FR 48 325 821 072
SIRET 325 821 072 00015 · Code APE 2815 Z · Code NACE 28.15

UKP320H
Bearing units

PRODUCT DEFINITION	
G - Grease fitting	M10x1
H - Distance mounting base to centerline spheric. seating diam.	140 mm
H1 - Housing foot height	50 mm
H2 - Housing height	275 mm
J - Mounting holes distance	380 mm
L - Housing length	490 mm
L1 - Housing foot length	130 mm
N - Mounting hole dimension	36 mm
N1 - Mounting hole length	50 mm
s1 - Distance nut to middle of bearing raceway	54 mm

PRODUCT PERFORMANCE	
C - Dynamic load rating	171600000 mN
C0 - Static load rating	140000000 mN
Operating temperature min.	253,15 °K
Operating temperature max.	373,15 °K

OTHER FEATURES	
Mass	37,31 kg
Adapter sleeve designation	H2320