Installation / LED/Buzzer 150

Siren BWM 8 tne 12VDC



Part No.: 153.000.54

MECHANICAL DATA	
Length	85 mm
Width	85 mm
Height	72 mm
Materials	PC PP-GF
Housing colour	Black
Protection category	IP66
Connection	Screw terminals
cross-sectional area maximum	1,50mm² / 16AWG
Cable entry	Membrane grommet
Cable entry minimum	d = 1 mm
Cable entry maximum	d = 8 mm
Type of fixing	Base mounting Wall mounting
Working temperature minimum	-25°C
Working temperature maximum	+50°C
Weight with packaging	177 g
Product weight	147 g

ELECTRICAL DATA	
Operating voltage	12V
Operating voltage type	DC
Operating voltage tolerance	+/- 10%
Rated operational voltage	12 VDC
Rated operational current	70 mA
Rated inrush current	1.250 mA
Protection class	Protection class 2
Pollution degree	3

ACUSTICAL DATA	
Volume (max) at 1m distance	100,0 dB (A)
Number of tones	8 tone
Acoustic service life	5,000 h minimum

APPROVAL DATA	
Conforms with CE	Yes
WEEE	Yes
Conforms with ATEX-directive	No
Conforms with CCC	No
Conforms with UL	No

! For additional installation and mounting information, refer to the appropriate user guide at www.werma.com. This printed copy is for information only and is subject to alteration.

Installation / LED/Buzzer 150

Siren BWM 8 tne 12VDC

Conforms with FCC	No
Conforms with IC	No
EAC certificate available	Yes
Conforms with AS-I	No
ICAO Certification	No
Conforms with DNV	No
Conforms with RoHS CN	No
Conforms with VdS	No

DRAWING

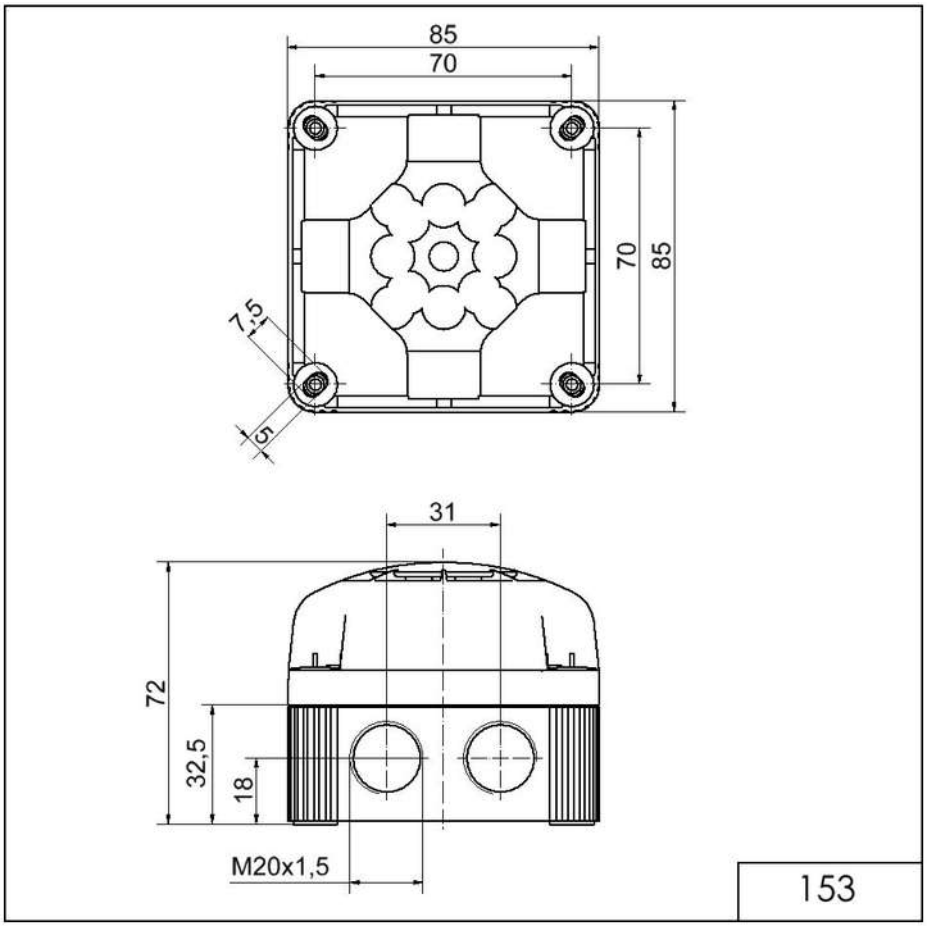

! For additional installation and mounting information, refer to the appropriate user guide at www.werma.com. This printed copy is for information only and is subject to alteration.