Y-bearing flanged units with cast housing

d **12–50** mm

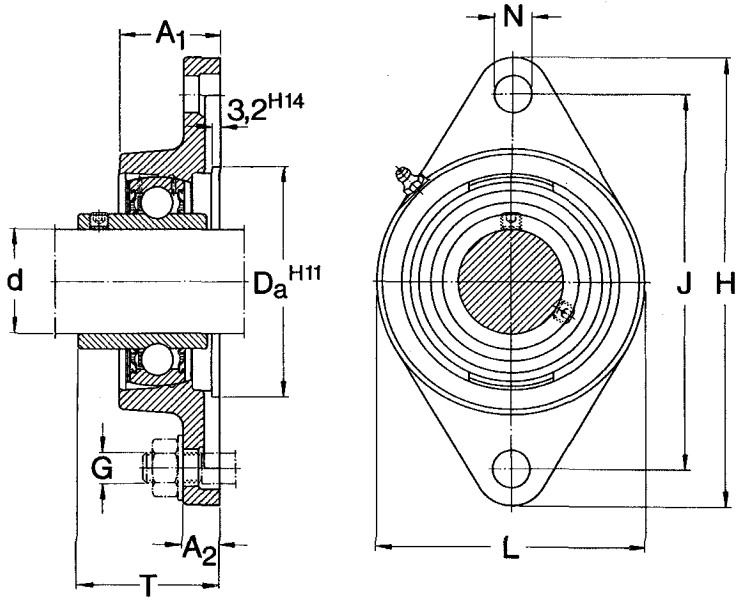

Dimensions										Mass	Designations Units[1]	Housing	Y-bearing
d	A_1	A_2	D_a	H	J	L	N	G	T				
mm										kg	–		
12	26	11	50,8	98,5	76,5	57	11,5	10	39,1	0,43	**FYTB 12 FM**	FYTB 503 M	YET 203/12
									32,9	0,42	**FYTB 12 TF**	FYTB 503 M	YAR 203/12-2F
15	26	11	50,8	98,5	76,5	57	11,5	10	39,1	0,42	**FYTB 15 FM**	FYTB 503 M	YET 203/15
									32,9	0,40	**FYTB 15 TF**	FYTB 503 M	YAR 203/15-2F
17	26	11	50,8	98,5	76,5	57	11,5	10	39,1	0,41	**FYTB 17 FM**	FYTB 503 M	YET 203
									40,4	0,43	**FYTB 17 WM**	FYTB 503 M	YEL 203
									32,9	0,39	**FYTB 17 TF**	FYTB 503 M	YAR 203-2F
20	29,5	11	50,8	112	90	60,5	11,5	10	42,5	0,52	**FYTB 20 FM**	FYTB 504 M	YET 204
									45,6	0,55	**FYTB 20 WM**	FYTB 504 M	YEL 204
									37,3	0,50	**FYTB 20 TF**	FYTB 504 M	YAR 204-2F
									39,5	0,50	**FYTB 20 KG**	FYTB 504 M	362004 BTN
25	30	12	63,5	124	99	70	11,5	10	42,5	0,64	**FYTB 25 FM**	FYTB 505 M	YET 205
									45,9	0,69	**FYTB 25 WM**	FYTB 505 M	YEL 205
									38,8	0,63	**FYTB 25 TF**	FYTB 505 M	YAR 205-2F
									39,5	0,63	**FYTB 25 KG**	FYTB 505 M	362005 BTN
30	32,5	13	76,2	141,5	116,5	83	11,5	10	46,7	0,95	**FYTB 30 FM**	FYTB 506 M	YET 206
									50,1	1,00	**FYTB 30 WM**	FYTB 506 M	YEL 206
									42,2	0,93	**FYTB 30 TF**	FYTB 506 M	YAR 206-2F
									43	0,90	**FYTB 30 KG**	FYTB 506 M	362006 BTN
35	34,5	13	88,9	156	130	96	14	12	50,4	1,30	**FYTB 35 FM**	FYTB 507 M	YET 207
									53,3	1,40	**FYTB 35 WM**	FYTB 507 M	YEL 207
									46,4	1,25	**FYTB 35 TF**	FYTB 507 M	YAR 207-2F
									45,5	1,25	**FYTB 35 KG**	FYTB 507 M	362007 B
40	38,5	14	88,9	171,5	143,5	102	14	12	56,7	1,70	**FYTB 40 FM**	FYTB 508 M	YET 208
									58,9	*1,80*	***FYTB 40 WM***	*FYTB 508 M*	*YEL 208*
									54,2	1,65	**FYTB 40 TF**	FYTB 508 M	YAR 208-2F
									51	1,65	**FYTB 40 KG**	FYTB 508 M	362008 B

[1] The units FYTB-WM are also available with flingers or flocked flingers; they then carry the suffixes F or L, e.g. FYTB 17 WF or FYTB 17 WL
The units FYTB-TF are also available with flocked flingers or without flingers; they then carry the suffixes L or M, e.g. FYTB 12 TL or FYTB 12 TM

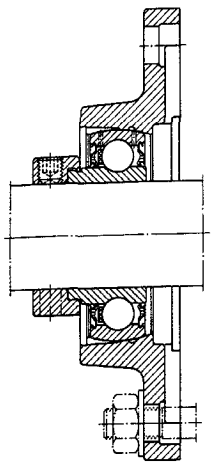

Series FYTB-FM

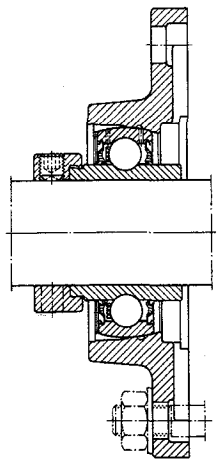

Series FYTB-WM

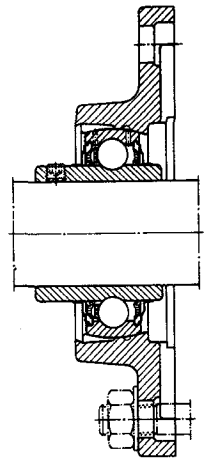

Series FYTB-TF

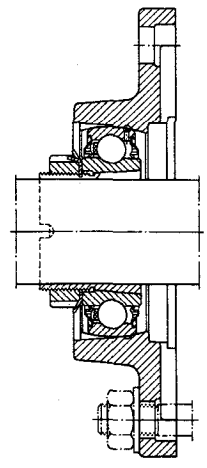

Series FYTB-KG

Dimensions										Mass	Designations Unit[1]	Housing	Y-bearing
d	A_1	A_2	D_a	H	J	L	N	G	T				
mm										kg	–		
45	39	14	98,4	178,5	148,5	111	16	14	56,7	1,85	**FYTB 45 FM**	FYTB 509 M	YET 209
									58,9	1,95	**FYTB 45 WM**	FYTB 509 M	YEL 209
									54,2	1,80	**FYTB 45 TF**	FYTB 509 M	YAR 209-2F
50	43	15	101,6	189	157	116	18	16	60,7	2,20	**FYTB 50 FM**	FYTB 510 M	YET 210
									66,1	2,35	**FYTB 50 WM**	FYTB 510 M	YEL 210
									60,6	2,15	**FYTB 50 TF**	FYTB 510 M	YAR 210-2F

[1] The units FYTB-WM are also available with flingers or flocked flingers; they then carry the suffixes F or L, e.g. FYTB 45 WF or FYTB 45 WL
The units FYTB-TF are also available with flocked flingers or without flingers; they then carry the suffixes L or M, e.g. FYTB 45 TL or FYTB 45 TM

Y-bearing flanged units with cast housing for inch shafts

d 5/8–1 11/16 in

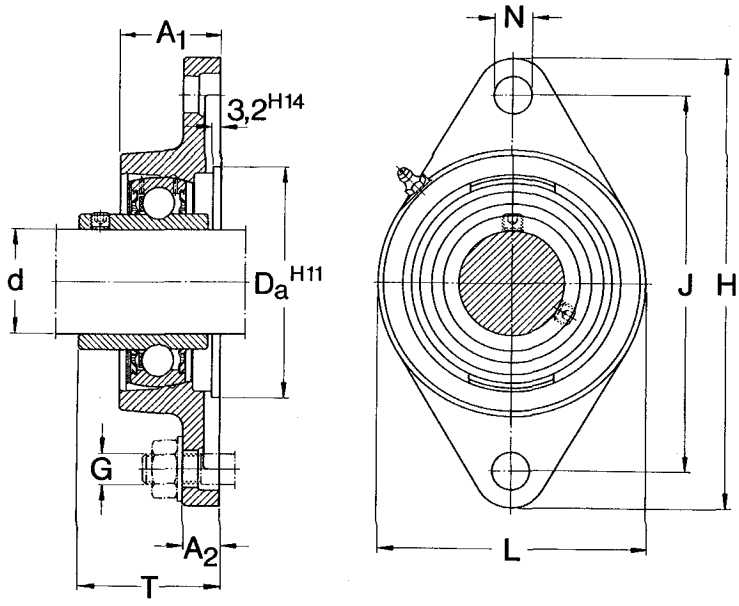

Dimensions										Mass	Designations Units[1]	Housing	Y-bearing
d	A_1	A_2	D_a	H	J	L	N	G	T				
in	mm									kg	–		
5/8	26	11	50,8	98,5	76,5	57	11,5	10	39,1	0,42	**FYTB 5/8 FM**	FYTB 503 M	YET 203-010
									40,4	0,43	**FYTB 5/8 WM**	FYTB 503 M	YEL 203-010
									32,9	0,39	**FYTB 5/8 TF**	FYTB 503 M	YAR 203-010-2F
11/16	26	11	50,8	98,5	76,5	57	11,5	10	39,1	0,41	**FYTB 11/16 FM**	FYTB 503 M	YET 203-011
									40,4	0,43	**FYTB 11/16 WM**	FYTB 503 M	YEL 203-011
									32,9	0,39	**FYTB 11/16 TF**	FYTB 503 M	YAR 203-011-2F
3/4	29,5	11	50,8	112	90	60,5	11,5	10	42,5	0,53	**FYTB 3/4 FM**	FYTB 504 M	YET 204-012
									45,6	0,56	**FYTB 3/4 WM**	FYTB 504 M	YEL 204-012
									37,3	0,50	**FYTB 3/4 TF**	FYTB 504 M	YAR 204-012-2F
13/16	30	12	63,5	124	99	70	11,5	10	42,5	0,68	**FYTB 13/16 FM**	FYTB 505 M	YET 205-013
									45,9	0,74	**FYTB 13/16 WM**	FYTB 505 M	YEL 205-013
									38,8	0,67	**FYTB 13/16 TF**	FYTB 505 M	YAR 205-013-2F
7/8	30	12	63,5	124	99	70	11,5	10	42,5	0,67	**FYTB 7/8 FM**	FYTB 505 M	YET 205-014
									45,9	0,72	**FYTB 7/8 WM**	FYTB 505 M	YEL 205-014
									38,8	0,66	**FYTB 7/8 TF**	FYTB 505 M	YAR 205-014-2F
15/16	30	12	63,5	124	99	70	11,5	10	42,5	0,66	**FYTB 15/16 FM**	FYTB 505 M	YET 205-015
									45,9	0,70	**FYTB 15/16 WM**	FYTB 505 M	YEL 205-015
									38,8	0,64	**FYTB 15/16 TF**	FYTB 505 M	YAR 205-015-2F
1	30	12	63,5	124	99	70	11,5	10	42,5	0,64	**FYTB 1. FM**	FYTB 505 M	YET 205-100
									45,9	0,68	**FYTB 1. WM**	FYTB 505 M	YEL 205-100
									38,8	0,63	**FYTB 1. TF**	FYTB 505 M	YAR 205-100-2F
1 1/8	32,5	13	76,2	141,5	116,5	83	11,5	10	46,7	0,97	**FYTB 1.1/8 FM**	FYTB 506 M	YET 206-102
									50,1	1,00	**FYTB 1.1/8 WM**	FYTB 506 M	YEL 206-102
									42,2	0,95	**FYTB 1.1/8 TF**	FYTB 506 M	YAR 206-102-2F
1 3/16	32,5	13	76,2	141,5	116,5	83	11,5	10	46,7	0,95	**FYTB 1.3/16 FM**	FYTB 506 M	YET 206-103
									50,1	1,00	**FYTB 1.3/16 WM**	FYTB 506 M	YEL 206-103
									42,2	0,92	**FYTB 1.3/16 TF**	FYTB 506 M	YAR 206-103-2F

[1] The units FYTB-WM are also available with flingers or flocked flingers; they then carry the suffixes F or L, e.g. FYTB 5/8 WF or FYTB 5/8 WL
The units FYTB-TF are also available with flocked flingers or without flingers; they then carry the suffixes L or M, e.g. FYTB 5/8 TL or FYTB 5/8 TM

SKF

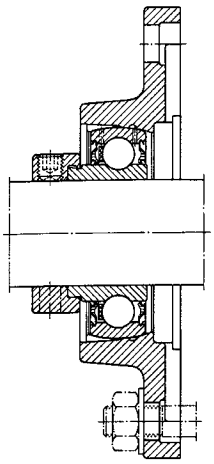

Series FYTB-FM

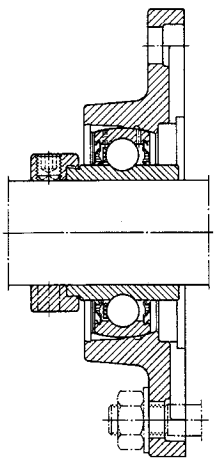

Series FYTB-WM

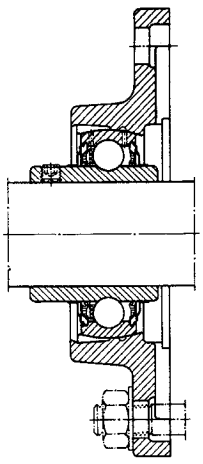

Series FYTB-TF

Dimensions										Mass	Designations Unit[1]	Housing	Y-bearing
d	A_1	A_2	D_a	H	J	L	N	G	T				
in	mm									kg	–		
1 1/4	32,5	13	76,2	141,5	116,5	83	11,5	10	46,7	0,93	**FYTB 1.1/4 AFM**	FYTB 506 M	YET 206-104
									50,1	0,97	**FYTB 1.1/4 AWM**	FYTB 506 M	YEL 206-104
									42,2	0,90	**FYTB 1.1/4 ATF**	FYTB 506 M	YAR 206-104-2F
	34,5	13	88,9	156	130	96	14	12	50,4	1,35	**FYTB 1.1/4 FM**	FYTB 507 M	YET 207-104
									53,3	1,45	**FYTB 1.1/4 WM**	FYTB 507 M	YEL 207-104
									46,4	1,30	**FYTB 1.1/4 TF**	FYTB 507 M	YAR 207-104-2F
1 5/16	34,5	13	88,9	156	130	96	14	12	50,4	1,30	**FYTB 1.5/16 FM**	FYTB 507 M	YET 207-105
									53,3	1,40	**FYTB 1.5/16 WM**	FYTB 507 M	YEL 207-105
									46,4	1,25	**FYTB 1.5/16 TF**	FYTB 507 M	YAR 207-105-2F
1 3/8	34,5	13	88,9	156	130	96	14	12	50,4	1,30	**FYTB 1.3/8 FM**	FYTB 507 M	YET 207-106
									53,3	1,40	**FYTB 1.3/8 WM**	FYTB 507 M	YEL 207-106
									46,4	1,25	**FYTB 1.3/8 TF**	FYTB 507 M	YAR 207-106-2F
1 7/16	34,5	13	88,9	156	130	96	14	12	50,4	1,30	**FYTB 1.7/16 FM**	FYTB 507 M	YET 207-107
									53,3	1,35	**FYTB 1.7/16 WM**	FYTB 507 M	YEL 207-107
									46,4	1,20	**FYTB 1.7/16 TF**	FYTB 507 M	YAR 207-107-2F
1 1/2	38,5	14	88,9	171,5	143,5	102	14	12	56,7	1,75	**FYTB 1.1/2 FM**	FYTB 508 M	YET 208-108
									58,9	1,85	**FYTB 1.1/2 WM**	FYTB 508 M	YEL 208-108
									54,2	1,70	**FYTB 1.1/2 TF**	FYTB 508 M	YAR 208-108-2F
1 9/16	38,5	14	88,9	171,5	143,5	102	14	12	56,7	1,75	**FYTB 1.9/16 FM**	FYTB 508 M	YET 208-109
									58,9	1,85	**FYTB 1.9/16 WM**	FYTB 508 M	YEL 208-109
									54,2	1,70	**FYTB 1.9/16 TF**	FYTB 508 M	YAR 208-109-2F
1 5/8	39	14	98,4	178,5	148,5	111	16	14	56,7	1,95	**FYTB 1.5/8 FM**	FYTB 509 M	YET 209-110
									58,9	2,05	**FYTB 1.5/8 WM**	FYTB 509 M	YEL 209-110
									54,2	1,90	**FYTB 1.5/8 TF**	FYTB 509 M	YAR 209-110-2F
1 11/16	39	14	98,4	178,5	148,5	111	16	14	56,7	1,90	**FYTB 1.11/16 FM**	FYTB 509 M	YET 209-111
									58,9	2,05	**FYTB 1.11/16 WM**	FYTB 509 M	YEL 209-111
									54,2	1,90	**FYTB 1.11/16 TF**	FYTB 509 M	YAR 209-111-2F

[1] The units FYTB-WM are also available with flingers or flocked flingers; they then carry the suffixes F or L, e.g. FYTB 1.1/4 WF or FYTB 1.1/4 WL
The units FYTB-TF are also available with flocked flingers or without flingers; they then carry the suffixes L or M, e.g. FYTB 1.1/4 TL or FYTB 1.1/4 TM