WIRING DIAGRAM

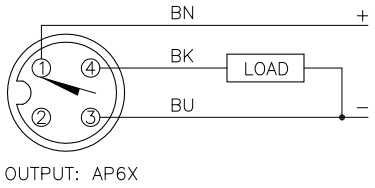

OUTPUT: AP6X

SHORT–CIRCUIT AND OVERLOAD PROTECTED

LOCKNUT LN–M30

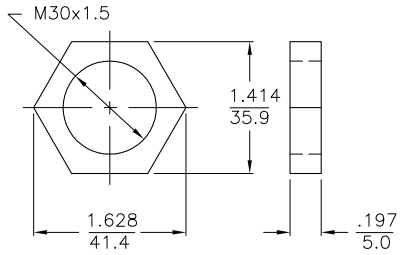

SPECIFICATIONS

RATED OPERATING DISTANCE	15mm = .591" (NOMINAL)
MOUNTING MODE	FLUSH
REPEATABILITY	≤ 2%
TEMPERATURE DRIFT	≤ ± 10%
HYSTERESIS	3–15%
AMBIENT TEMPERATURE	–25°C to +70°C (–13°F to +158°F)
OPERATING VOLTAGE	10–30 VDC
RESIDUAL RIPPLE	≤ 10%
RATED OPERATIONAL CURRENT	≤ 200 mA
NO–LOAD CURRENT	≤ 15 mA
RESIDUAL CURRENT	≤ 0.1 mA
RATED INSULATION VOLTAGE	≤ 0.5 kV
SHORT–CIRCUIT PROTECTION	YES
MAX. VOLTAGE DROP	≤ 1.8 V
WIRE BREAK PROTECTION	INCORPORATED
REVERSE POLARITY PROTECTION	INCORPORATED
OUTPUT FUNCTION	3–WIRE, NORMALLY OPEN, PNP
SWITCHING FREQUENCY	≤ 0.3 kHz
HOUSING MATERAL	CHROME PLATED BRASS
ACTIVE FACE	PLASTIC, PA12–GF20
CONNECTION	M12x1
VIBRATION RESISTANCE	55 Hz (IN ALL 3 PLANES)
SHOCK RESISTANCE	30 g, 11 ms
PROTECTION DEGREE	IP67
SWITCHING STATUS INDICATION	LED; YELLOW

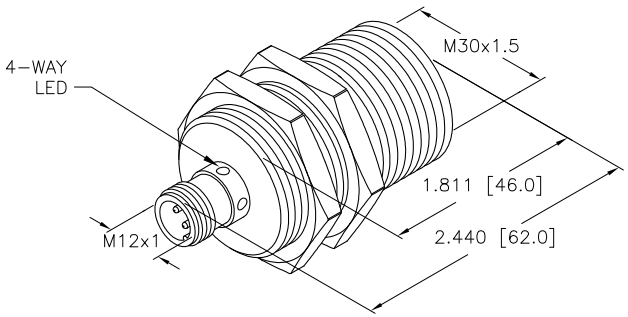

RELATED DOCUMENTS	3RD ANGLE PROJECTION	THIS DRAWING IS PROPERTY OF TURCK INC. USE OF THIS DOCUMENT WITHOUT WRITTEN PERMISSION IS PROHIBITED.	TURCK INC High Technology Sensors and Automation Controls	3000 CAMPUS DRIVE MINNEAPOLIS, MN 55441 1–800–544–7769 (763) 553–7300 (763) 553–0708 fax turck.com
1. 2. 3. 4.				
MATERIAL: SEE SPECS	ALL DIMENSIONS DISPLAYED ON THIS DRAWING ARE FOR REFERENCE ONLY CONTACT TURCK FOR MORE INFORMATION	DRFT: IK; DATE: 07/13/98 DSGN:; SCALE: 1=1.5 UNIT OF MEASUREMENT: **INCH [MILLIMETER]** DO NOT SCALE THIS DRAWING	DESCRIPTION: Bi15–M30–AP6X–H1141 IDENTIFICATION NO.: T4618500; REV: A FILE: T4618500; SHEET 1 OF 1	
FINISH: SEE SPECS				

REV	DESCRIPTION	BY	DATE	ECO NO.
A	DRAWING RELEASE	CBM	09/28/99	