

# Mushroom actuator, black, momentary

**Part no.** M22-DP-S
**Article no.** 216712
**Catalog No.** M22-DP-SQ

## Delivery programme

| | | | |
|---|---|---|---|
| Product range | | | RMQ-Titan (drilling dimensions 22.5 mm) |
| Basic function | | | Mushroom-headed pushbutton |
| Single unit/Complete unit | | | Single unit |
| Design | | | Mushroom |
| | | | momentary |
| **Colour** | | | |
| Mushroom | | | black |
| Mushroom colour | | | 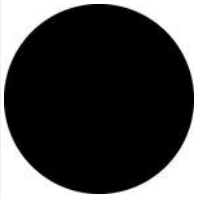 |
| **Button plate** | | | |
| button plate | | | black |
| Button plate | | | 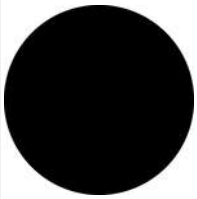 |
| | | | Blank |
| Degree of Protection | | | IP67, IP69K |
| Front ring | | | Bezel: titanium |
| Connection to SmartWire-DT | | | Yes, with SWD-RMQ connections |
| **Actuator travel and actuation force as per DIN EN 60947-5-1, K.5.4.1** | | | |
| Minimum force for positive opening | N | | 0 |
| Front dimensions | | | 22 x 22 |
| Function | | | momentary |

## Technical data

### General

| | | | |
|---|---|---|---|
| Standards | | | IEC/EN 60947<br>VDE 0660 |
| Lifespan, mechanical | Operations | x $10^6$ | > 5 |
| Operating frequency | Operations/h | | 3600 |
| Actuating force | | n | 5 |
| Climatic proofing | | | Damp heat, constant, to IEC 60068-2-78<br>Damp heat, cyclic, to IEC 60068-2-30 |
| Ambient temperature | | | |
| Open | | °C | -25 - +70 |
| Storage | | °C | - 40 - + 80 |
| Mounting position | | | As required |
| Mechanical shock resistance | | g | 30<br>Shock duration 11 ms<br>Sinusoidal<br>according to IEC 60068-2-27 |

## Design verification as per IEC/EN 61439

| | | | |
|---|---|---|---|
| Technical data for design verification | | | |

| | | | |
|---|---|---|---|
| Rated operational current for specified heat dissipation | $I_n$ | A | 0 |
| Heat dissipation per pole, current-dependent | $P_{vid}$ | W | 0 |
| Equipment heat dissipation, current-dependent | $P_{vid}$ | W | 0 |
| Static heat dissipation, non-current-dependent | $P_{vs}$ | W | 0 |
| Heat dissipation capacity | $P_{diss}$ | W | 0 |
| Operating ambient temperature min. | | °C | -25 |
| Operating ambient temperature max. | | °C | 70 |
| IEC/EN 61439 design verification | | | |
| 10.2 Strength of materials and parts | | | |
| 10.2.2 Corrosion resistance | | | Meets the product standard's requirements. |
| 10.2.3.1 Verification of thermal stability of enclosures | | | Meets the product standard's requirements. |
| 10.2.3.2 Verification of resistance of insulating materials to normal heat | | | Meets the product standard's requirements. |
| 10.2.3.3 Verification of resistance of insulating materials to abnormal heat and fire due to internal electric effects | | | Meets the product standard's requirements. |
| 10.2.4 Resistance to ultra-violet (UV) radiation | | | Please enquire |
| 10.2.5 Lifting | | | Does not apply, since the entire switchgear needs to be evaluated. |
| 10.2.6 Mechanical impact | | | Does not apply, since the entire switchgear needs to be evaluated. |
| 10.2.7 Inscriptions | | | Meets the product standard's requirements. |
| 10.3 Degree of protection of ASSEMBLIES | | | Does not apply, since the entire switchgear needs to be evaluated. |
| 10.4 Clearances and creepage distances | | | Meets the product standard's requirements. |
| 10.5 Protection against electric shock | | | Does not apply, since the entire switchgear needs to be evaluated. |
| 10.6 Incorporation of switching devices and components | | | Does not apply, since the entire switchgear needs to be evaluated. |
| 10.7 Internal electrical circuits and connections | | | Is the panel builder's responsibility. |
| 10.8 Connections for external conductors | | | Is the panel builder's responsibility. |
| 10.9 Insulation properties | | | |
| 10.9.2 Power-frequency electric strength | | | Is the panel builder's responsibility. |
| 10.9.3 Impulse withstand voltage | | | Is the panel builder's responsibility. |
| 10.9.4 Testing of enclosures made of insulating material | | | Is the panel builder's responsibility. |
| 10.10 Temperature rise | | | Not applicable. |
| 10.11 Short-circuit rating | | | Is the panel builder's responsibility. The specifications for the switchgear must be observed. |
| 10.12 Electromagnetic compatibility | | | Is the panel builder's responsibility. The specifications for the switchgear must be observed. |
| 10.13 Mechanical function | | | The device meets the requirements, provided the information in the instruction leaflet (IL) is observed. |

## Technical data ETIM 6.0

Low-voltage industrial components (EG000017) / Front element for mushroom push-button (EC001038)

Electric engineering, automation, process control engineering / Low-voltage switch technology / Command and alarm device / Front element for mushroom push-button actuators (ecl@ss8.1-27-37-12-12 [AKF030011])

| | | |
|---|---|---|
| Colour button | | Black |
| Construction type lens | | Round |
| Diameter cap | mm | 36.5 |
| Hole diameter | mm | 22 |
| Width opening | mm | 22 |
| Height meter opening | mm | 6 |
| Degree of protection (IP) | | IP67 |
| Type of button | | Flat |
| Suitable for illumination | | No |
| Switching function latching | | No |
| Spring-return | | Yes |
| With front ring | | Yes |
| Material front ring | | Plastic |
| Colour front ring | | Chrome |
| Suitable for emergency stop | | No |
| Unlocking method | | None |

## Approvals

| | |
|---|---|
| | IEC/EN 60947-5; UL 508; CSA-C22.2 No. 14-05; CSA-C22.2 No. 94-91; CE marking |
| | E29184 |
| | NKCR |
| | 012528 |
| | 3211-03 |
| | UL listed, CSA certified |
| | UL/CSA Type 3R, 4X, 12, 13 |

## Dimensions

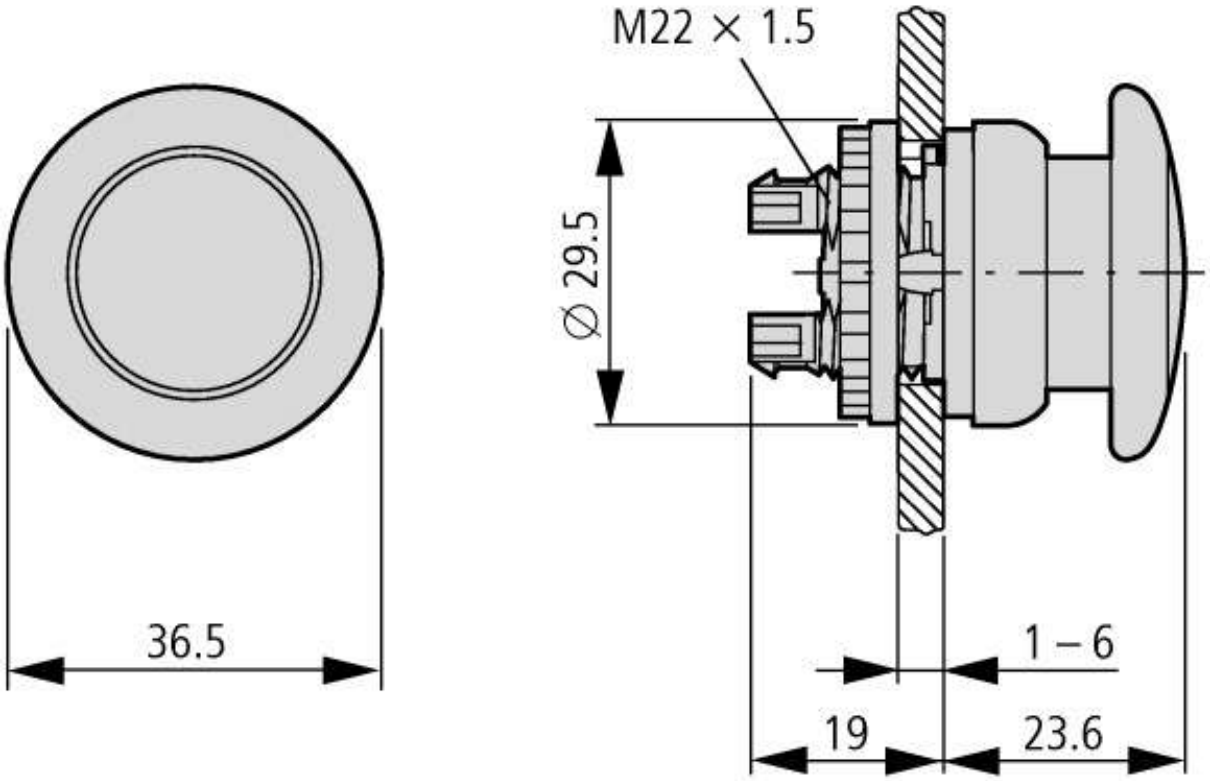

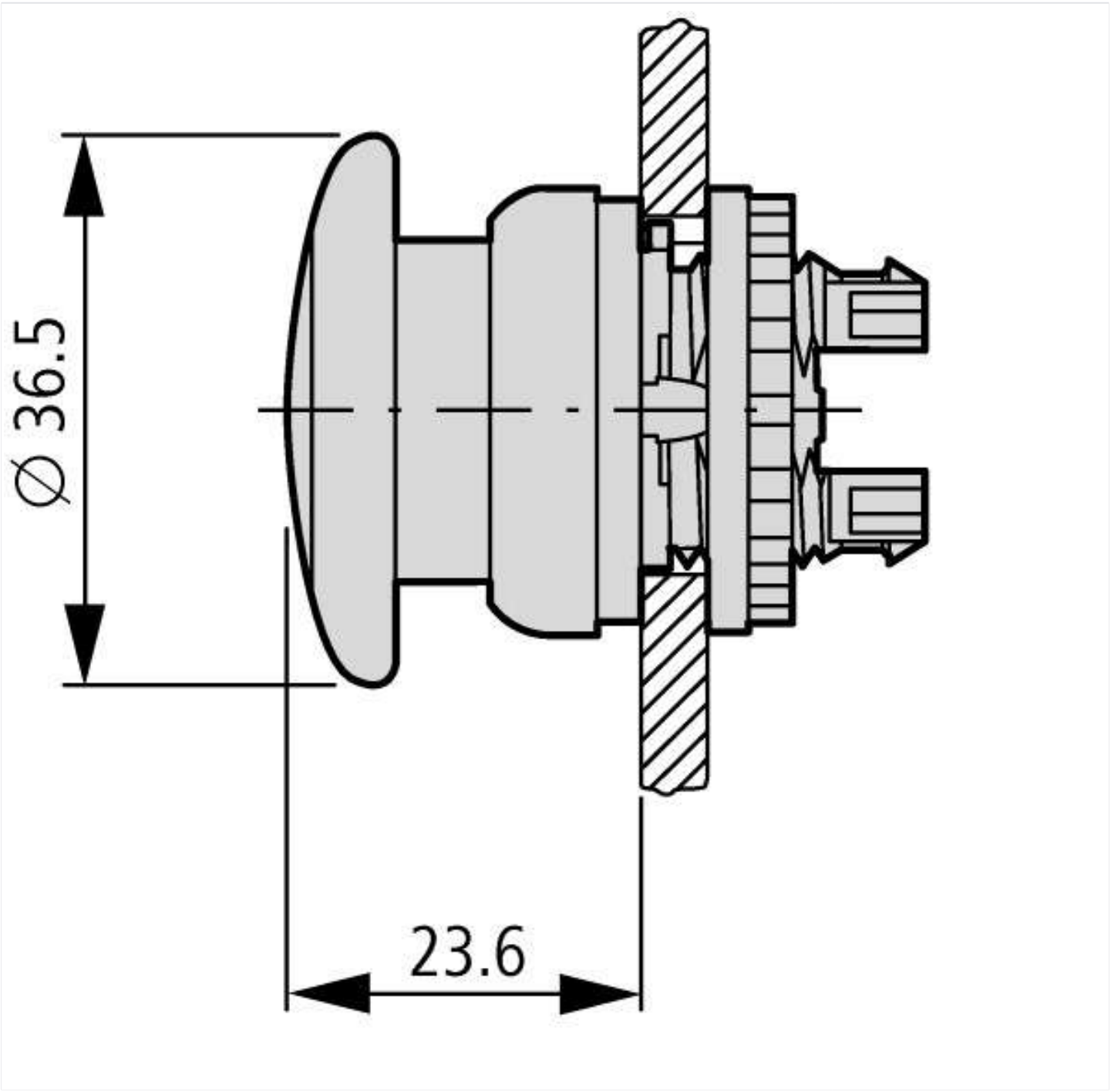


## Additional product information (links)

| IL04716002Z (AWA1160-1745) RMQ-Titan System | |
|---|---|
| IL04716002Z (AWA1160-1745) RMQ-Titan System | ftp://ftp.moeller.net/DOCUMENTATION/AWA_INSTRUCTIONS/IL04716002Z2015_02.pdf |


© 03/2016 by Eaton Industries GmbH