Protistor® size 22x58 gR

690VAC (IEC) / 700VAC (UL)

SEMICONDUCTOR PROTECTION FUSES

IEC HIGH-SPEED CYLINDRICAL FUSE-LINKS AC PROTECTION



These Protistor® size 22x58 have been designed to protect power semiconductors, complying with standard IEC 60269-1 and -4.

They are extremely high interrupting rating fuses: 690 VAC, with large band of ratings (current rating 15 to 135 A).

Two models are existing: with or without trip-indicator

TECHNICAL DATA OVERVIEW

Ampere Range (A)	12 ... 135 A
Size per Standard	22x58
Speed/Characteristic	gR
I.R. AC (IEC)	160 kA
I.R. AC (UL)	200 kA
I.R. DC (UL)	50 kA
Rated voltage AC (IEC)	690 V
Rated voltage AC (UL)	700 V
Rated voltage DC (UL)	500 V

FEATURES & BENEFITS

- IEC standard 60269-4 compliant
- UL 248-13 compliant
- gR class
- Clearing all overloads
- Improved safety and protection
- Enabling selective coordination among all
- Distribution circuit fuses
- With or without trip-indicator

STANDARDS

- IEC 60269-4
- UL recognized
- UL 248-13
- CCC GB 1539.4
- RoHS compliant

MERSEN reserves the right to change, update or correct, without notice, any information contained in this datasheet.

PRODUCT RANGE

CP 22x58 gR with striker

Catalog number	Reference number	Rated voltage AC (IEC)	Rated current I_n	Pre-arcing I^2t	Clearing I^2t at Rated Voltage	Power dissipation at In	Weight	Package
FR22GR69V12T	W1018620	690 V	12 A	5.4 A²s	60 A²s	4.4 W	60 g	10
FR22GR69V16T	X1018621	690 V	16 A	13.1 A²s	125 A²s	4.65 W	60 g	10
FR22GR69V20T	Y1018622	690 V	20 A	17.1 A²s	160 A²s	7 W	60 g	10
FR22GR69V25T	Z1018623	690 V	25 A	38.6 A²s	315 A²s	7.65 W	60 g	10
FR22GR69V32T	A1018624	690 V	32 A	77.4 A²s	670 A²s	9.1 W	60 g	10
FR22GR69V40T	B1018625	690 V	40 A	154 A²s	1050 A²s	9.5 W	60 g	10
FR22GR69V50T	C1018626	690 V	50 A	292 A²s	2050 A²s	11.8 W	60 g	10
FR22GR69V63T	D1018627	690 V	63 A	519 A²s	3350 A²s	13.6 W	60 g	10
FR22GR69V80T	E1018628	690 V	80 A	1240 A²s	7600 A²s	13.8 W	60 g	10
FR22GR69V100T	F1018629	690 V	100 A	2470 A²s	14500 A²s	16 W	60 g	10
FR22GR69V125T	G1018630	690 V	125 A	3360 A²s	16800 A²s	22.8 W	60 g	10
FR22GR69V135T	H1018631	690 V	135 A	4390 A²s	19800 A²s	25.5 W	60 g	10



FR22GR69V12

CP 22x58 gR without striker

Catalog number	Reference number	Rated voltage AC (IEC)	Rated current I_n	Pre-arcing I^2t	Clearing I^2t at Rated Voltage	Power dissipation at In	Weight	Package
FR22GR69V12	W1018551	690 V	12 A	5.4 A²s	60 A²s	4.4 W	60 g	10
FR22GR69V16	X1018552	690 V	16 A	13.1 A²s	125 A²s	4.65 W	60 g	10
FR22GR69V20	Y1018553	690 V	20 A	17.1 A²s	160 A²s	7 W	60 g	10
FR22GR69V25	Z1018554	690 V	25 A	38.6 A²s	315 A²s	7.65 W	60 g	10
FR22GR69V32	A1018555	690 V	32 A	77.4 A²s	670 A²s	9.1 W	60 g	10
FR22GR69V40	B1018556	690 V	40 A	154 A²s	1050 A²s	9.5 W	60 g	10
FR22GR69V50	C1018557	690 V	50 A	292 A²s	2050 A²s	11.8 W	60 g	10
FR22GR69V63	D1018558	690 V	63 A	519 A²s	3350 A²s	13.6 W	60 g	10
FR22GR69V80	E1018559	690 V	80 A	1240 A²s	7600 A²s	13.8 W	60 g	10
FR22GR69V100	F1018560	690 V	100 A	2470 A²s	14500 A²s	16 W	60 g	10
FR22GR69V125	G1018561	690 V	125 A	3360 A²s	16800 A²s	22.8 W	60 g	10
FR22GR69V135	H1018562	690 V	135 A	4390 A²s	19800 A²s	25.5 W	60 g	10

MERSEN reserves the right to change, update or correct, without notice, any information contained in this datasheet.

TIME CURRENT CHARACTERISTIC CURVES

Size 22x58 gR

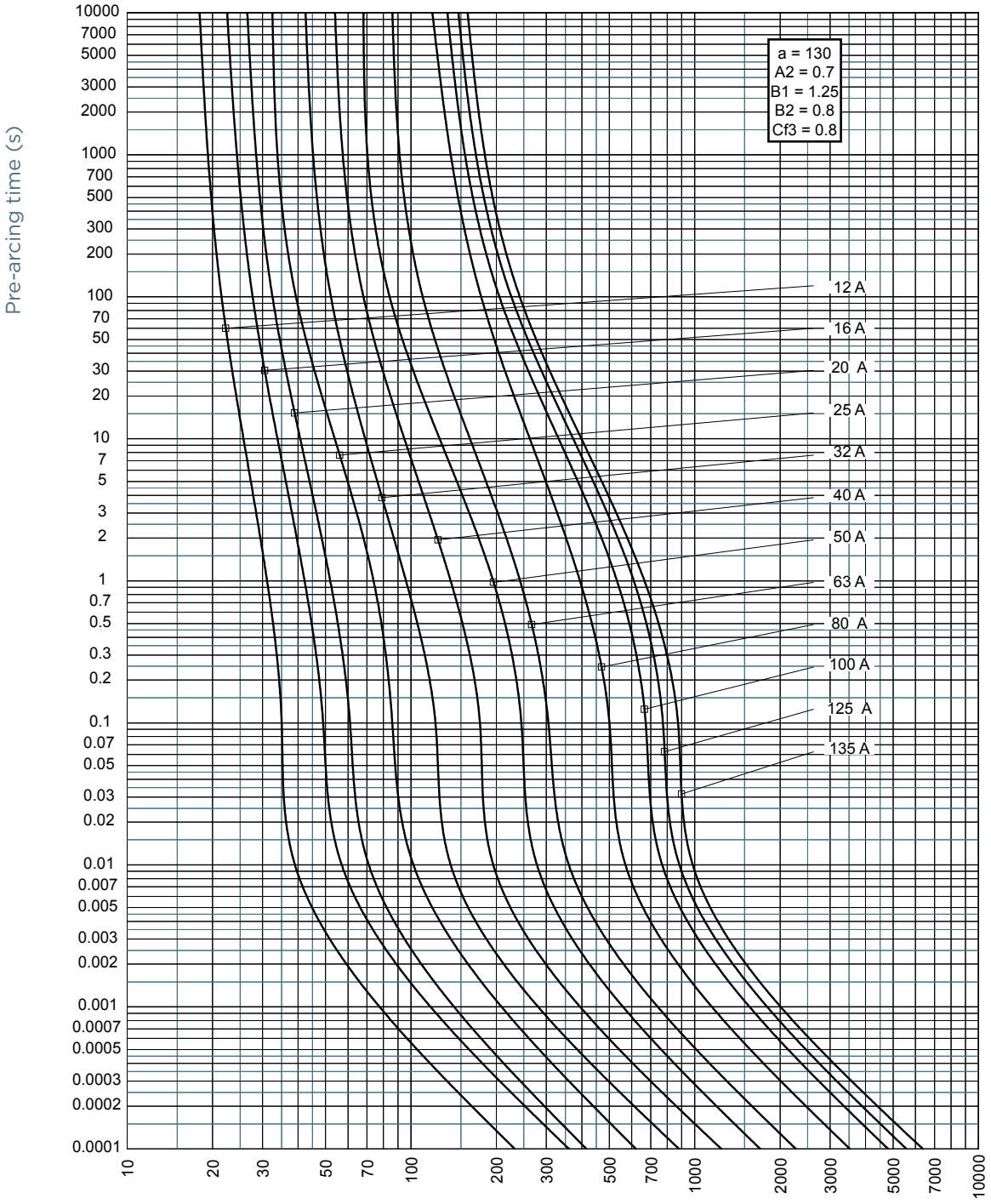

RMS value of prospective current (A) +/- 8%

MERSEN reserves the right to change, update or correct, without notice, any information contained in this datasheet.

CUT-OFF CURRENT CHARACTERISTIC

Size 22x58 gR

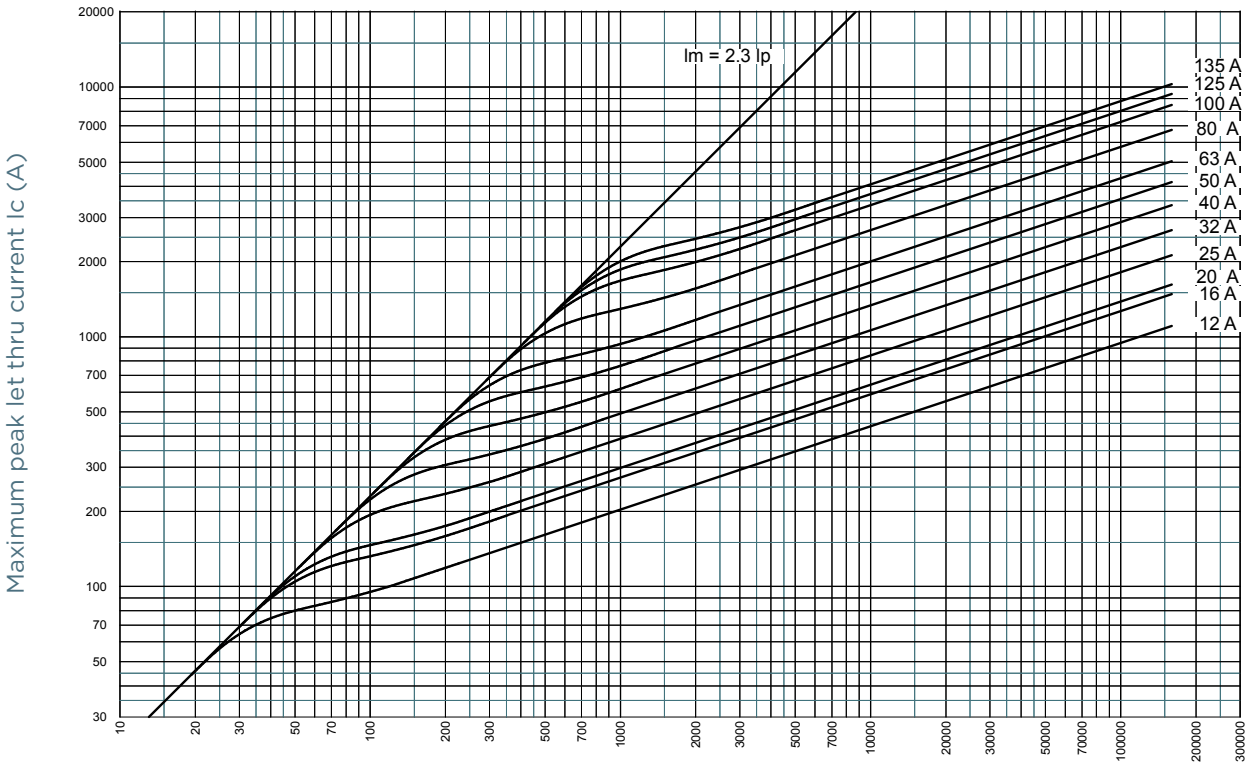

MERSEN reserves the right to change, update or correct, without notice, any information contained in this datasheet.

I^2T MULTIPLIER COEFFICIENT

Size 22x58 gR

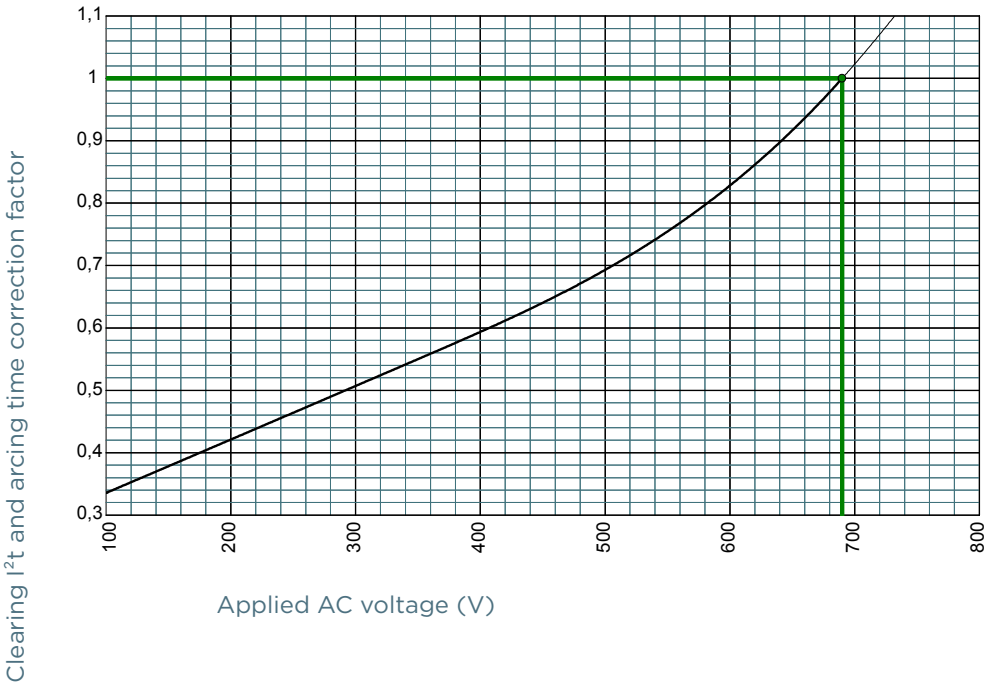

MERSEN reserves the right to change, update or correct, without notice, any information contained in this datasheet.

CHARACTERISTICS TOTAL I^2T CURVE

Size 22x58 gR

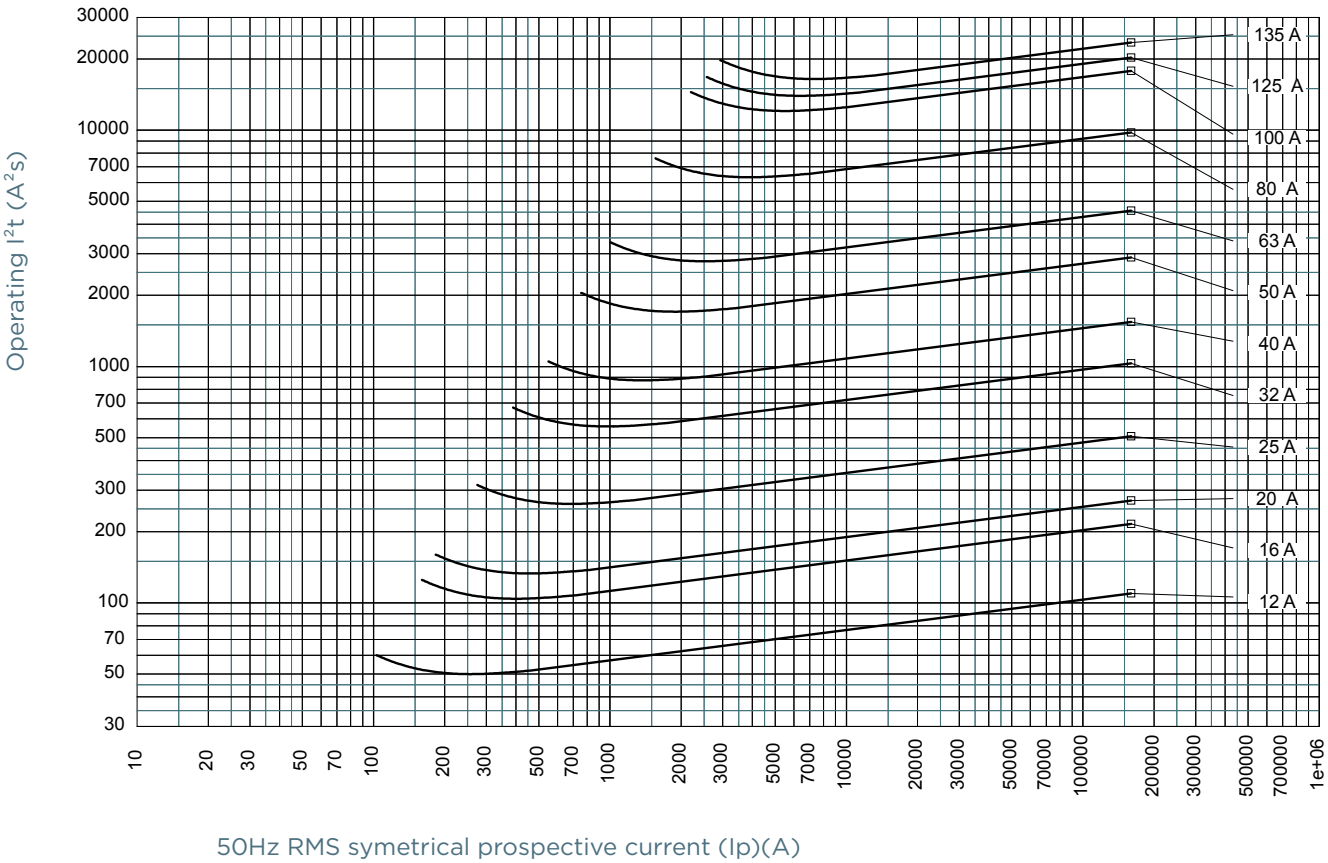

MERSEN reserves the right to change, update or correct, without notice, any information contained in this datasheet.

POWER DISSIPATION

Size 22x58 gR

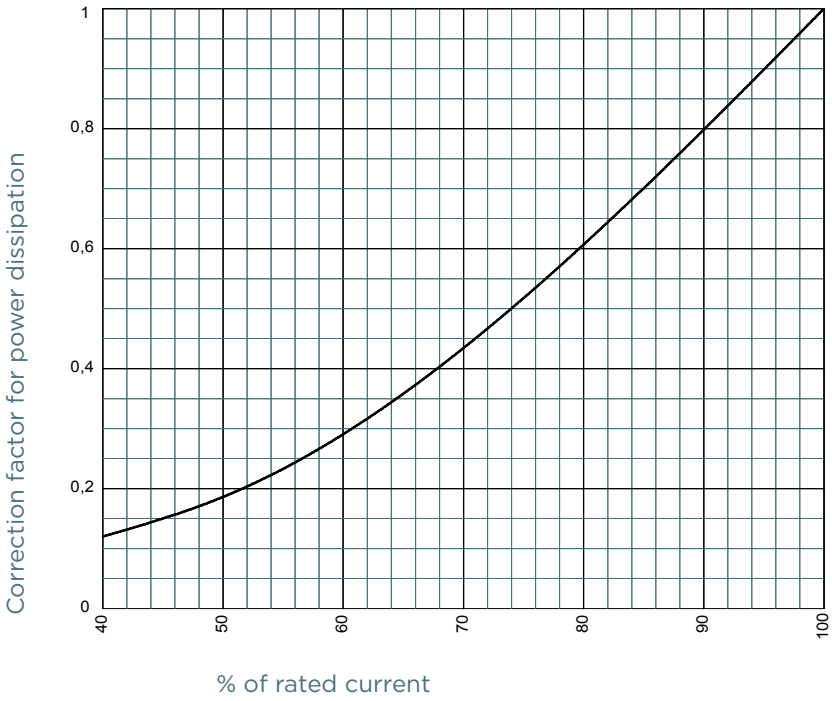

DIMENSIONS

CP 22x58 gR with striker (100213)

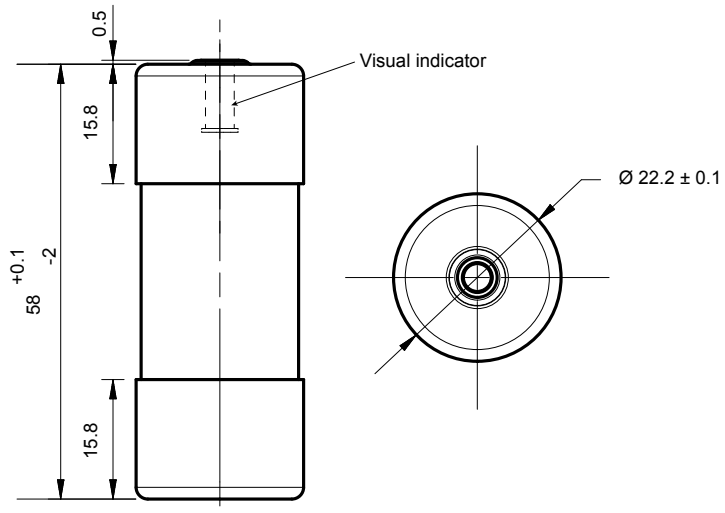

Dimensions in mm

MERSEN reserves the right to change, update or correct, without notice, any information contained in this datasheet.

DIMENSIONS

CP 22x58 gR without striker (100214)

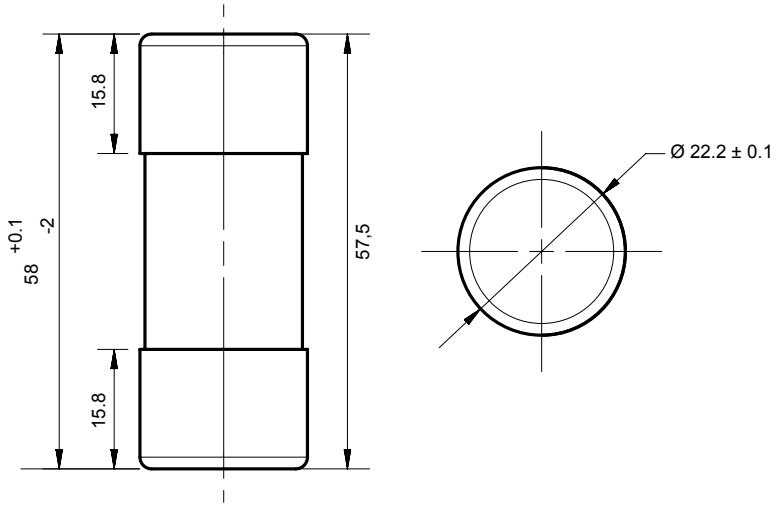

Dimensions in mm

MERSEN reserves the right to change, update or correct, without notice, any information contained in this datasheet.