E11863

Wirable socket

SDOAH042VASFKPG

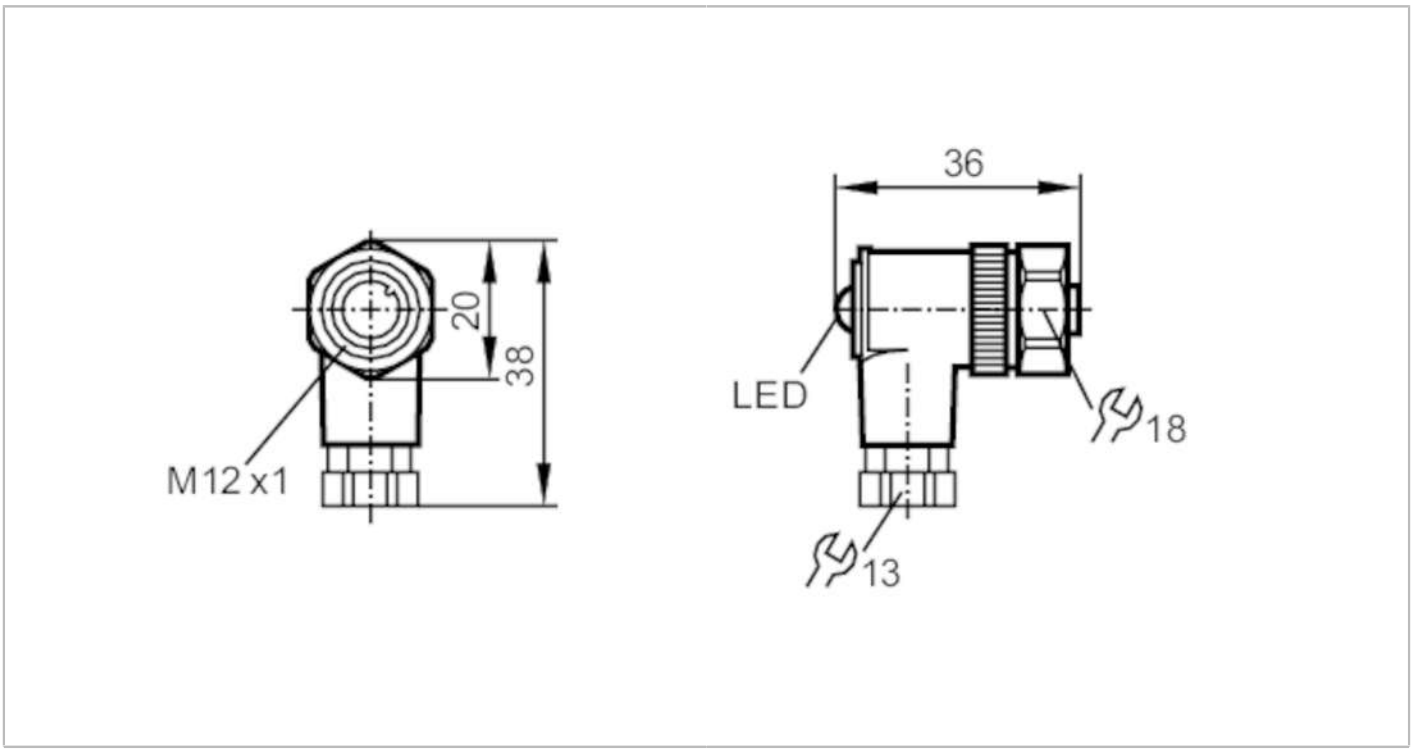

Application		
Special feature		Free from silicone; Gold-plated contacts
Free from silicone		yes
Electrical data		
Operating voltage	[V]	10...30 DC
Max. current load total	[A]	4; (...40 °C)
Outputs		
Electrical design		PNP
Operating conditions		
Ambient temperature	[°C]	-25...85
Protection		IP 67; IP 69K
Mechanical data		
Weight	[g]	26.4
Dimensions	[mm]	38 x 20 x 36
Materials		PBT; PA transparent
Moulded-body material		PBT / PA, transparent
Material nut		stainless steel
Displays / operating elements		
Display	switching status	1 x LED, yellow
	operation	1 x LED, green
Remarks		
Pack quantity		1 pcs.

E11863

Wirable socket

SDOAH042VASFKPG

Electrical connection

screw terminals: ...0.75 mm²; Cable sheath: Ø 4...6 mm

Electrical connection - socket

Connector: 1 x M12, angled; coding: A; Moulded body: PBT / PA, transparent; Locking: stainless steel; Contacts: gold-plated; Tightening torque: 0.7...0.9 Nm

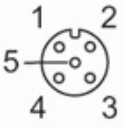

Connection

