

Version 27

EOLIS 0030A2

EOLIS 0030A2 is an isolated analog converter designed to respond in a simple and economical way to all transmission problems, signal isolation and lightning shock protection.





Universal power supply



Hot-swappable plug in and out



Sensor power supply

- Presentation
- Applications
- Dimensions
- Factory settings
- Inputs - Outputs
- Characteristics
- Options listing
- Wiring

Presentation

These analog converters 0...4... 20mA – 0...4... 20mA are available in 2 ranges:

- EOLIS 0030A2 is a double isolator: each independent and isolated channel has an input 0... 4... 20mA with sensor power supply and a current output 0... 4... 20mA.
- EOLIS 0030A2- F is a double isolator: each independent and isolated channelhas an input 0... 4... 20mA with sensor power supply and a current output 0... 4... 20mA with lightning shock protection

EOLIS 0030A2 is guaranteed for 5 years.

Applications

EOLIS 0030A2 & EOLIS 0030A2F have been specially designed to be used as an interface for isolation and signal conditioning, between:

- Sensors and PLCs.
- PLCs and actuators.

To facilitate wiring, commissioning, operation and maintenance, JM Concept has developed pre-wired plates: BASELINE (screw or spring loaded).

BASELINE also has SUBD connections to connect directly to the PLCs via conductor cables. This solution facilitates implementation, reduces cabling time and increases system reliability.

Dimensions

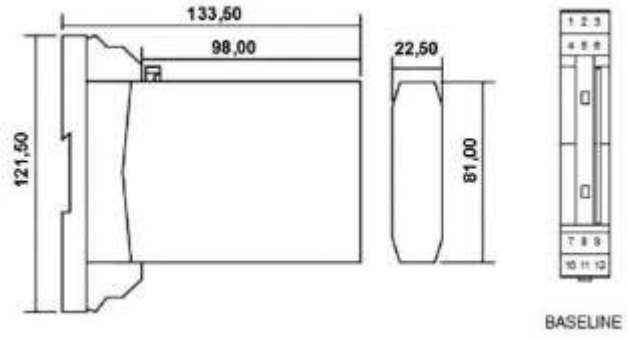

Dimensions : width : 22,5 mm - Height : 81 mm - Depth : 98 mm

BASELINE boards are to be ordered separately

22,5 mm Case : Reference BL01ALV

For multi-converter boards, please consult us.

Factory settings

Channel 1	Channel 2
Input : 4-20mA	Input : 4-20mA
Output : 4-20mA	Output : 4-20mA

Other settings on demand

Inputs - Outputs

Possible settings for EOLIS 0030A2 :

Input 0-20mA / Output 0-20mA

Input 4-20mA / Output 0-20mA

Input 4-20mA / Output 4-20mA

Input gauges

Current (continuous)	0-20mA ; 4-20mA
Sensor supply	Sensor 2 wires 24Vdc ; Supply Sensor : 24V - 26mA max

Output gauges

Current	0-20mA ; 4-20mA

Characteristics

Inputs characteristics	
Current input impedance	4,75Ω
Output characteristics	
Permissible impedance on the current output 1 & 2	<1kΩ
Isolation	
Supply / Input(s)-Output(s)	4200Vrms, 50Hz, 1mn
Input(s) / Output(s)	1500Vrms, 50Hz, 1mn
Input x / Input y	2500Vrms, 50Hz, 1mn
Output x / Output y	2500Vrms, 50Hz, 1mn
Auxiliary source	
Voltage supply	22-240Vdc or 90-230Vac 50/60Hz
General characteristics	
Precision Class	0,1
Response time	<3ms
Thermal drift	<50ppm
Maximum of consumption	<7VA
Operating temperature	-10°C … +60°C
Storage temperature	-25°C … +80°C
Protection factor	IP20 Black self-extinguishing polyamide housing V0

Options listing

Option	Device code
Tropicalization in a 22,5mm case	EOLIS 0030A2-T
Auxiliary source 20-60Vac	EOLIS 0039A2
Lightning shock resistance Rapport LCIE 60031114-529387	EOLIS 0030A2-F

Wiring

EOLIS 0030A2

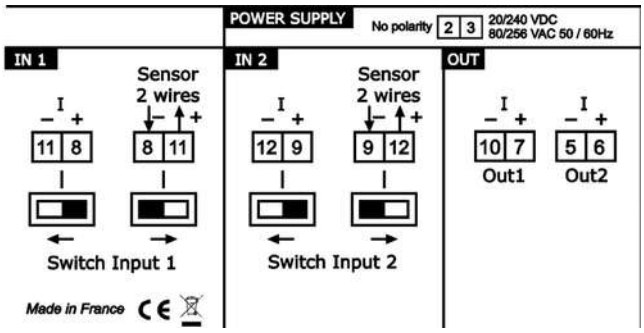

Activation inverter for a 2 wires sensor power supply

An activation inverter for each input, accessible under the converter, allows to activate or deactivate the 2 wires sensor power supply independently on each of the 2 channels.

Procedure for setting the outputs

- Connect a current generator to the input terminals.
- Connect a current multimeter to the terminals of the output.
- Use the generator to inject the signal corresponding to the low value of the input signal.
- Use the "OFFSET" potentiometer to adjust the low scale of the output.
- Use the generator to inject the signal corresponding to the high value of the input signal.
- Use the "SCALE" potentiometer to adjust the top of the scale of the output

Repeat successively these 2 operations as many times as necessary until the correct low and high scale values are obtained.