E20826

Fibre optic diffuse reflection sensor

FT-50-V-V-R5

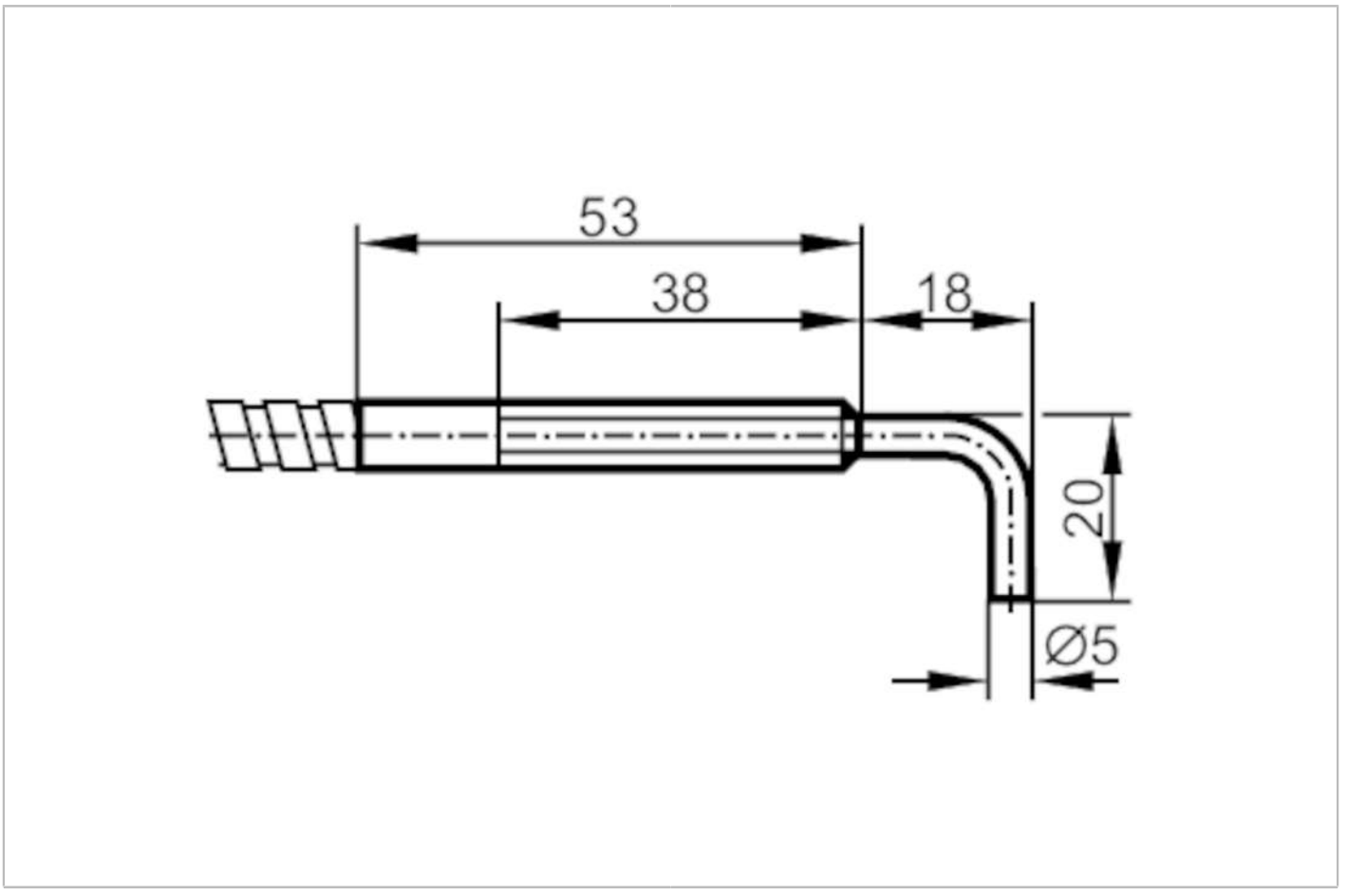

Application		
Function principle		Diffuse reflection sensor
Detection zone		
Range with fibre optic amplifier type		OBF; ODF; OMF
OBF		
Range fibre optics	[mm]	150
ODF		
Range fibre optics	[mm]	1
OMF		
Range fibre optics	[mm]	175
Operating conditions		
Ambient temperature	[°C]	-58...315
Mechanical data		
Weight	[g]	126
Version of sensing head		angled
Sensing head diameter	[mm]	5
Total length	[mm]	900
Min. bending radius	[mm]	19
Fibre arrangement		◐

E20826

Fibre optic diffuse reflection sensor

FT-50-V-V-R5

Fibre material	glass
Fibre head material	stainless steel (1.4305 / 303)
Fibre sheath material	stainless steel (1.4305 / 303)
Accessories	
Items supplied	lock nuts: 2
	spring washers: 2
Remarks	
Pack quantity	1 pcs.