MURR ELEKTRONIK
stay connected

M12 male 0° D-cod. with cable shielded

PUR 1x4xAWG22 shielded rd UL/CSA+drag ch. 5m

Ethernet CAT5
Transmission properties with channel transmission up to 100 m
Male straight
M12, 4-pole
D-coded
shielded
Further cable lengths on request.
Plastic housings with good resistance against chemicals and oils.
The resistance to aggressive media should be individually tested for your application. Further details on request.

Link to Product

Illustration



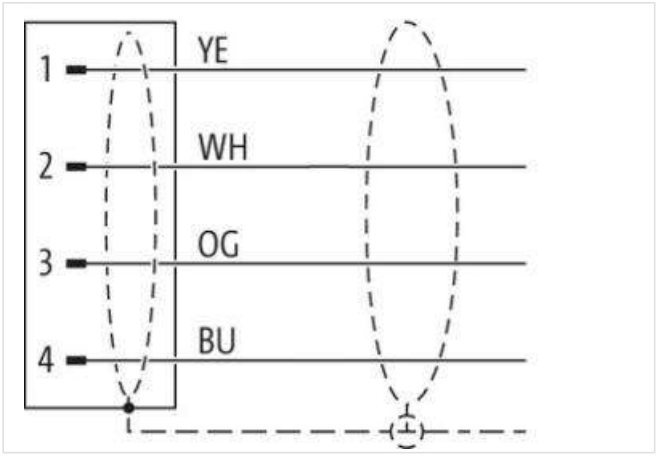

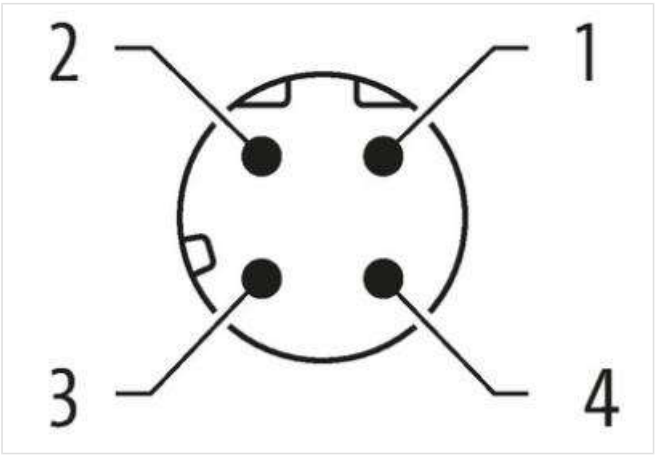

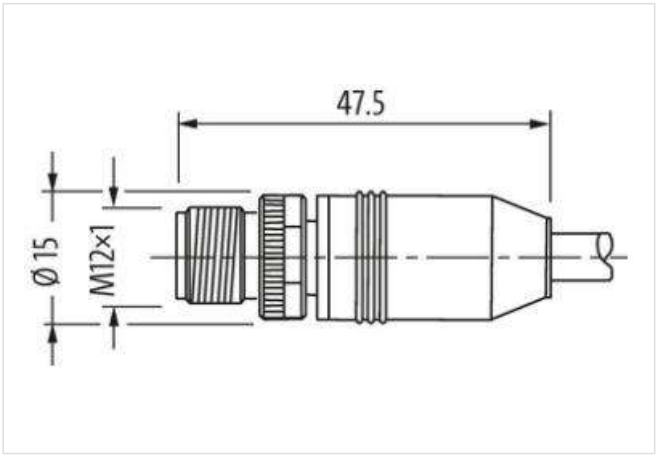

Product may differ from Image

Cable length	5 m

The information in this Product-PDF has been compiled with the utmost care.
Liability for the correctness completeness and topicality of the information is restricted to gross negligence. Version: 2024-01-31

MURR ELEKTRONIK
stay connected

Side 1	
Tightening torque	0,6 Nm
Mounting method	inserted, screwed
Family construction form	M12
Thread	M12 x 1
Coding	D
Material	PUR
Width across flats	SW13
Degree of protection (EN IEC 60529)	IP65, IP66K, IP67
Commercial data	
ECLASS-6.0	27061801
ECLASS-6.1	27060307
ECLASS-7.0	27060307
ECLASS-8.0	27060307
ECLASS-9.0	27060307
ECLASS-10.1	27060307
ECLASS-11.1	27060307
ECLASS-12.0	27060307
ETIM-5.0	EC002599
customs tariff number	85444290
GTIN	4048879406505
Packaging unit	1
Electrical data | Supply	
Operating voltage DC max.	60 V
Current operating per contact max.	1,5 A
Industrial communication	
Transfer parameters	CAT5, Class D (ISO/IEC 11801:2002), (EN 50173-1)
Data transmission rate max.	100 MBit/s
Industrial communication | Ethernet functionality	
duplex	Full duplex
Installation | Connection	
Mounting set	M12 x 1
Device protection | Electrical	
Additional condition protection degree	inserted, screwed
Pollution Degree	3
Rated surge voltage	1,5 kV
Material group (IEC 60664-1)	I
Mechanical data	
Contour for corrugated hose	without
Mechanical data | Material data	
Coating locking	Nickeled
Coating of fitting	nickel plated
Locking material	Zinc die-casting
Material screw connection	Zinc die-casting
Mechanical data | Mounting data	
Mounting method	inserted, screwed, Shaking protection
Environmental characteristics | Climatic	
Operating temperature min.	-25 °C
Operating temperature max.	85 °C
Additional condition temperature range	depending on cable quality

The information in this Product-PDF has been compiled with the utmost care.
Liability for the correctness completeness and topicality of the information is restricted to gross negligence. Version: 2024-01-31

MURR ELEKTRONIK
stay connected

Conformities, approvals	
Product standard	DIN EN 61076-2-101 (M12)
Cable	
Cable identification	792
Approval (cable)	cURus (AWM-Style 20549/11602), CE-conform
Cable weight [g/m]	69,3 g
Material wire	Cu wire, bare
Resistor (core)	max. 55 Ω/km (20 °C)
Construction (core)	7× 0.254 mm
Diameter (core)	1× 4× AWG22/7
Material wire isolation	PE
Wire-Ø incl. isolation	1.4 mm ±5%
Color/numbering of wires	wh, ye, bl, or
Shield	yes
Shield (Type)	Copper braid
Optical shield cover	min. 85%
Material jacket	PUR
Material property (jacket)	CFC-, halogen-, cadmium-, silicone- and lead-free, matt, low-adhesion, machine easy to process, abrasion-resistant, hydrolysis and microbial resistant
Outer-Ø (jacket)	6.7 mm ±5%
Color jacket	red
chemical resistance	Oil resistance according to IEC 60811-2-1, ASTM IRM 901, ICEA S-82-552 Std.
thermal resistance	flame-retardant according to UL 1581 section 1090, section 1100 (FT2), IEC 60332-1-2 Std.
Nominal voltage	300 V
Test voltage	2000 V AC (test duration 1 min)
Temperature range (fixed)	-40...+80 °C
Temperature range (mobile)	-30...+70 °C
Bend radius (fixed)	5× outer Ø
Bend radius (moving)	12× outer Ø
No. of bending cycles (C-track)	max. 3 Mio. (25 °C)
Traversing distance (C-track)	max. 5 m (horizontal)
Travel speed (C-track)	max. 3.3 m/s
Acceleration (C-track)	max. 2 m/s²
Torsion stress	±180°/m
No. of torsion cycles	max. 1 Mio. (25 °C)

The information in this Product-PDF has been compiled with the utmost care.
Liability for the correctness completeness and topicality of the information is restricted to gross negligence. Version: 2024-01-31