E11652

Jumper cable with valve plug

AVDAB031PLS0005H03

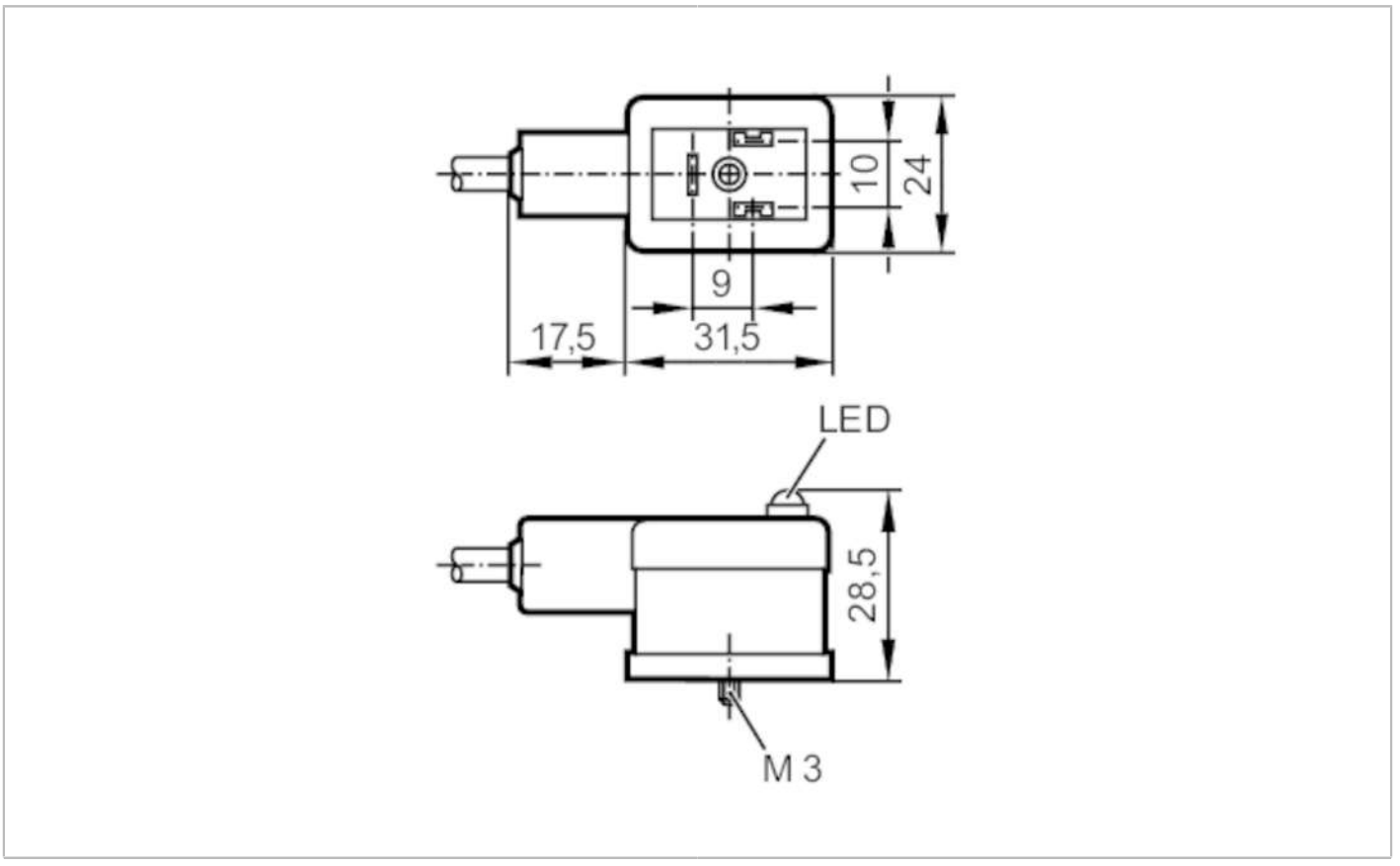

Application			
Special feature			Free from silicone; Halogen-free
Free from silicone			yes
Electrical data			
Operating voltage	[V]		< 24 AC/DC
Overvoltage protection			yes; (VDR)
Operating conditions			
Ambient temperature	[°C]		-20...80
Protection			IP 67
Mechanical data			
Weight	[g]		255.8
Dimensions	[mm]		28.5 x 24 x 49
Materials			PP; FKM
Moulded-body material			PP / FPM
Material nut			brass, nickel-plated
Displays / operating elements			
Display		switching status	1 x LED, yellow
Remarks			
Pack quantity			1 pcs.

E11652

Jumper cable with valve plug

AVDAB031PLS0005H03

Electrical connection

Cable: 5 m, PUR, Halogen-free, Ø 6.6 mm; 3 x 0.5 mm² / AWG 20

Electrical connection - socket

Connector: 1 x valve type B DIN, angled; Moulded body: PP / FPM; Locking: brass, nickel-plated



Connection

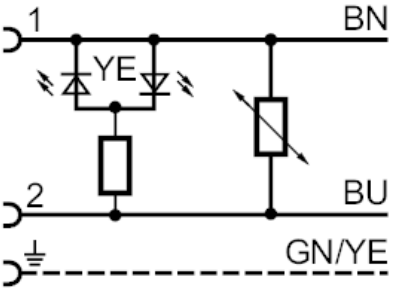

	Core colours :
BN =	brown
BU =	blue
GN/YE =	green/yellow