OG5123

Diffuse reflection sensor with background suppression

OGH-HPKG/US/90°/100MM

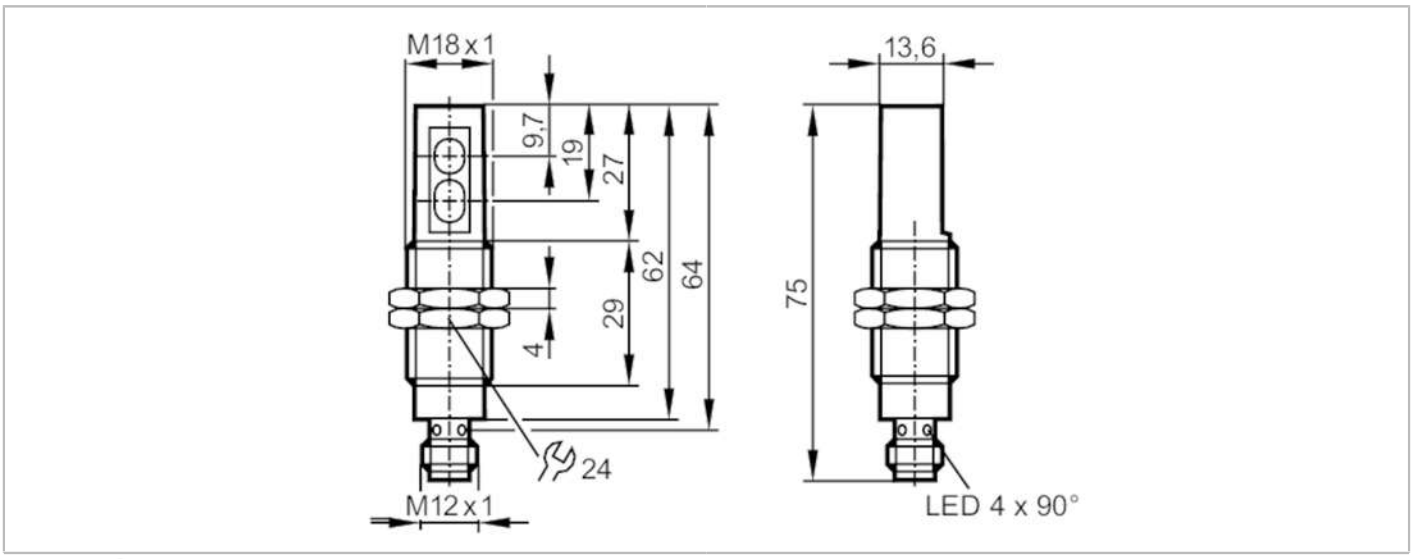

Product characteristics		
Type of light		red light
Housing		threaded type
Application		
Special feature		Background suppression
Function principle		Diffuse reflection sensor
Electrical data		
Operating voltage	[V]	10...30 DC; ("supply class 2" to cULus)
Current consumption	[mA]	25
Protection class		II
Reverse polarity protection		yes
Type of light		red light
Wave length	[nm]	625
Outputs		
Electrical design		PNP
Output function		light-on mode
Max. voltage drop switching output DC	[V]	2.5
Permanent current rating of switching output DC	[mA]	200
Switching frequency DC	[Hz]	1000
Short-circuit protection		yes
Type of short-circuit protection		pulsed
Overload protection		yes
Detection zone		
Range	[mm]	< 100; (white paper 200 x 200 mm 90% remission)
Range adjustable		no
Max. light spot diameter	[mm]	16

OG5123

Diffuse reflection sensor with background suppression

OGH-HPKG/US/90°/100MM

Light spot dimensions refer to		at maximum range	
Background suppression available		yes	
Operating conditions			
Ambient temperature	[°C]	-25...60	
Protection		IP 68	
Tests / approvals			
EMC		EN 60947-5-2	
		EN 55011	class B
MTTF	[years]	541	
Mechanical data			
Weight	[g]	57.3	
Housing		threaded type	
Dimensions	[mm]	M18 x 1 / L = 65	
Thread designation		M18 x 1	
Materials		stainless steel; ABS	
Lens material		PMMA	
Displays / operating elements			
Display		switching status	1 x LED, yellow
		operation	1 x LED, green
Accessories			
Items supplied		Nuts: 2	
		lock washers: 2	
Remarks			
Pack quantity		1 pcs.	
Electrical connection			

Connector: 1 x M12; coding: A



OG5123

Diffuse reflection sensor with background suppression

OGH-HPKG/US/90°/100MM

Connection

