E43206

Flange plate for level sensors

FLANGE PLATE 73-90/NPT3/4

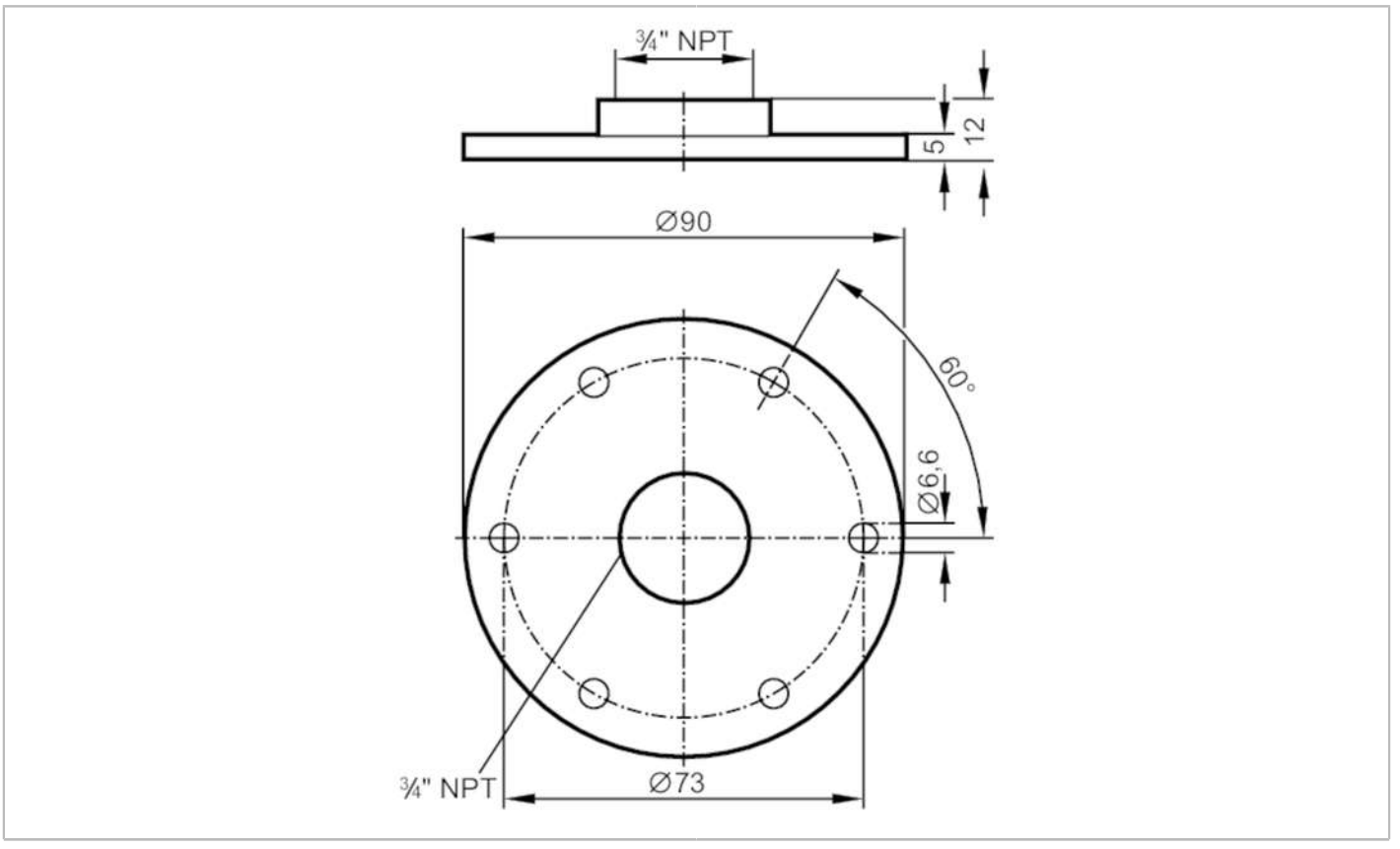

Application		
Design		for level sensors LR
Installation		according to DIN 24557
Tank pressure	[bar]	-1...16
Operating conditions		
Ambient temperature	[°C]	0...80
Mechanical data		
Weight	[g]	266.8
Type of mounting		according to DIN 24557
Materials		flange: stainless steel (1.4305 / 303); Sealing: NBR
Tightening torque	[Nm]	< 40
Sensor connection		3/4" NPT
Process connection		flange
Remarks		
Pack quantity		1 pcs.