6006-2Z

SKF Explorer

Dimensions

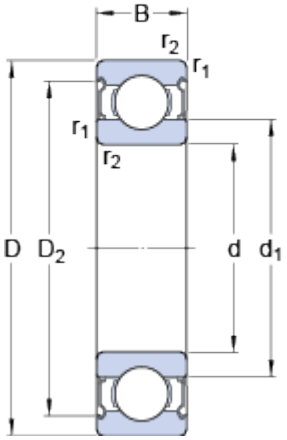

d		30	mm
D		55	mm
B		13	mm
d_1		38.2	mm
D_2		49	mm
$r_{1,2}$	min.	1	mm

Abutment dimensions

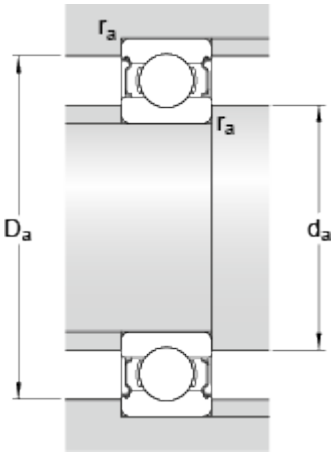

d_a	min.	34.6	mm
d_a	max.	38.1	mm
D_a	max.	50.4	mm
r_a	max.	1	mm

Calculation data

Basic dynamic load rating	C	13.8	kN
Basic static load rating	C_0	8.3	kN
Fatigue load limit	P_u	0.355	kN
Reference speed		28000	r/min
Limiting speed		14000	r/min
Calculation factor	k_r	0.025	
Calculation factor	f_0	15	

Mass

Mass bearing	0.122	kg