DATA SHEET



INCLINED LIQUID COLUMN MANOMETERS

MG series

Pressure / Depression

The MG range of inclined liquid column manometers, developed and manufactured by Sauermann, measure slight variations in pressure, depression or differential pressure of air or gas. They are for use in the following applications: treatment of air, ventilation, air conditioning, heating, dust elimination...

- **Zero adjustement by moving the slide strip**
- **Integrated spirit level for adjusting horizontality**
- **Safety reservoir enabling momentaneous overshooting of the scale**
- **Supplied with a white PVC support, two screws and two rawplugs, two 487 connectors and a bottle of AWS 10 liquid**

Measuring range

Reference	Measuring range		Sensitivity scale	Resolution
	mm H_2O	Pascal	For 1 mm H_2O or 10 Pa	
MG 20	0 - 20	0 - 200	8 mm	0.5 mm H_2O or 5 Pa
MG 50	0 - 50	0 - 500	3 mm	1 mm H_2O or 10 Pa
MG 80	0 - 80	0 - 800	2.5 mm	1 mm H_2O or 10 Pa

General features

Recommended range of use	From +5 to +30 °C
Possible range of use	From -30 to +60 °C
Maximum static pressure	6 bars
Manometer body	Transparent 15 mm thick Altuglas
Liquid column	Entirely bored in the solid block, Ø 4 mm
Graduated slide strip	Transparent Altuglas. Cross-section 20 x 2 mm
Zero adjustment	By moving the graduated slide strip, travel 20 mm. Fixed via milled, nickel-plated brass screw
Positionning	Horizontal positioning via integrated spirit level and milled, nickel-plated brass adjusting screw, vertical travel 12 mm
Manometric liquid	AWS 10 red oil, density 0.87 at 15 °C
Reservoir capacity	20 ml
Connection	Ø 5 x 8 mm semi-rigid crystal tube, on Ø 6.2 mm ribbed, nickel-plated brass connectors, 1/8 gas thread
Wall-mounted	With or without white PVC support

Dimensions

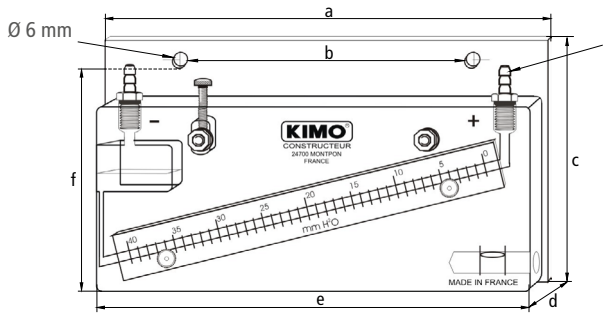

Reference	MG 20	MG 50	MG 80
a	196 mm	178 mm	219 mm
b	128 mm	110 mm	151 mm
c	80 mm	117 mm	154 mm
d	25 mm	25 mm	25 mm
e	192 mm	174 mm	215 mm
f	55 mm	109 mm	129 mm
Weight	320 g	420 g	660 g

Mounting

1. **Mount** on a wall or a vertical partition wall with two maximum **Ø 5 x 25 mm** screws (supplied).
2. **Set horizontality** using the integrated level and the milled adjusting screw.
3. **Unscrew the connector** on the reservoir and **slowly pour the manometric liquid** to zero point on the graduation.
4. **Remount the connector** without overtightening.
5. **Connect the manometer** with the **Ø 5 x 8 mm** crystal tube to the pressure or depression source to be checked.

Note:
For a **pressure** measurement: connect the crystal tube to the **right-hand connector (+)**
For a depression measurement: connect the crystal tube to the **left-hand connector (-)**
For a differential pressure: connect the highest pressure to the **right-hand connector (+)** and the lowest pressure to the **left hand connector (-)**

Maintenance: MG manometers require no special maintenance other than simply changing the reading liquid once a year.

FT_EN – MG - 01/07/20 – Non-contractual document – We reserve the right to modify the characteristics of our products without prior notice.