LED pulse counters | 6 count modes (DC) | Codix 521



The Codix 521 is a voltage powered pulse counter / position display for fast and slow count pulses, with 6-digit LED display for NPN, PNP input signals.

Equipped with 4 count input modes: count direction, difference, addition, quadrature (phase discriminator) x1, x2 and x4.



Powerful

- Fast count input – input frequency max. 60 kHz.
- Robust housing – IP65 protected.
- Very bright LED display, 8 mm high.
- Position, difference, adding or count direction detection
  - programmable for positive (PNP) or OV (NPN) switching input pulses.
  - fast count input with an input frequency of max. 60 kHz, can be damped to 30 Hz for mechanical contacts.
- Short start-up time – detects input pulses just 16 msec after being switched on => no pulses are lost with a simultaneous motor start-up.

User-friendly

- Large keys – can also be operated when wearing gloves.
- Simple uniform menu-driven programming and operation
  – possible to enter the programming also during operation with a confirmation prompt.
- Individually programmable scaling:
  Multiplication and division factor (0.0001…99.9999), to display corresponding engineering units, e.g. position in 1/10 mm or packing units.
- 4 different count input modes:
  2-channel count input for detecting count direction, difference or adding mode, quadrature with x1, x2 or x4 evaluation.
- Freely programmable setpoint.
- As an alternative to the HTL inputs, devices are available with a 4 ... 30 V DC input level, for use as parallel displays to PLCs.
- Optional output - as zero signal.

Order code

6.521	.	01	X (a)	.	3	X (b)	0

(a) *Output*
1 = optocoupler output
2 = no output [1)]

(b) *Input switching level*
0 = Standard (HTL) [1)]
A = 4 ... 30 V DC

Delivery specification
– Counter
– Mounting clip
– Gasket
– Instruction manual, multilingual
– Front bezel for screw mounting (T008181)
  56 x 40 mm [2.20 x 1.57"], panel cut-out 50 x 25 mm [1.97 x 0.98"]
– Front bezel for clip mounting (T008180)
  53 x 28 mm [2.09 x 1.10"], panel cut-out 50 x 25 mm [1.97 x 0.98"]

1) Stock types

© Fritz Kübler GmbH, subject to errors and changes. 07/2015

LED pulse counters | 6 count modes (DC) | Codix 521

Accessories	Dimensions in mm [inch]	Order-No.
Adapter front bezel, 72 x 36 [2.83 x 1.42]	For cut-out 68 x 33 [2.68 x 1.30] to cut-out 45 x 22.2 [1.77 x 0.87], for counters 48 x 24 [1.89 x 0.94], as set — black and silver anodised	**162704 Set**
Adapter front bezel, 48 x 48 [1.89 x 1.89]	For cut-out 45 x 45 [1.77 x 1.77] to cut-out 45 x 22.2 [1.77 x 0.87], with clip mounting for counters 48 x 24 [1.89 x 0.94] — black	**T008883**
Adapter front bezel, 60 x 50 [2.36 x 1.97]	For cut-out 54 x 29 [2.13 x 1.14] to cut-out 45 x 22.2 [1.77 x 0.87], with screw mounting and gasket for counters 48 x 24 [1.89 x 0.94] — black	**N003001**
Transparent cover, lockable, IP65	For cut-out 54 x 29 [2.13 x 1.14], for screw mounting to front bezel F1B or adapter front bezel N003001, for counters with cut-out 50 x 25 [1.97 x 0.98] or 45 x 22.2 [1.77 x 0.87]	**N003002**
Sealing cover type K1, IP65	Suitable for front bezel 60 x 50 [2.36 x 1.97], for screw mounting of electromech. counters and via adapter front bezel N003001 for counters 48 x 24 [1.89 x 0.94]	**G008301**
Mounting frame with cut-out 50 x 25 [2.36 x 1.97] via separate adapter also for 45 x 22.2 [1.77 x 0.87]	For snap-on mounting on 35 [1.38] top-hat DIN rail, for counters 53 x 28 [2.09 x 1.10] and via separate adapter (T008180) for counters 48 x 24 [1.89 x 0.94] — chromated	**G300004**

Suitable gaskets as well as further accessories can be found in the accessories section or in the accessories area of our website at: www.kuebler.com/accessories.

Technical data

General technical data

Display		6 digits, red 7 segment LED display; 8 mm [0.32"] high
Data backup		EEPROM
Operating temperature	10 ... 26 V DC > 26 ... 30 V DC	-20°C ... +65°C [-4°F ... +149°F] -20°C ... +55°C [-4°F ... +131°F] (non-condensing)
Storage temperature		-25°C ... +70°C [-13°F ... +158°F]

Electrical characteristics

Power supply		10 ... 30 V DC, with reverse polarity protection
Current consumption		max. 55 mA
EMC	Emitted interference Immunity to interference	EN 55011 class B EN 61000-6-2

Mechanical characteristics

Housing	front panel mount 48 x 24 mm [1.89 x 0.94"] acc. to DIN 43700; RAL 7021, dark grey
Protection	IP65 (front side)
Weight	approx. 50 g [1.76 oz]

Inputs

Polarity of inputs		programmable, NPN or PNP for all inputs
Input resistance		approx. 5 kΩ
Counting frequency		max. 60 kHz, can be damped to 30 Hz; for position display max. 25 kHz
Minimum pulse duration of the reset input		5 ms
Input switching level (HTL)	LOW HIGH	0 ... 0.2 x U_B (V DC) 0.6 x U_B ... 30 V DC
Input switching level at 4 ... 30 V DC	LOW HIGH	0 ... 2 V DC 4 ... 30 V DC

Outputs (optional)

Optocoupler output	max. 30 V DC, 10 mA

Applications for position displays / totalisers

- Positioning tasks on processing machines, such as sawing machines, milling machines, bending and folding machines, etc.
- Production data acquisition by means of piece counting (using difference or adding)
- Totalizing flow, quantity and other scalable media
- Counting tasks such as quantity and piece counting
- Accessories, OEM equipment or retrofitting to production machines
- Piece counting on die cutters, presses, extruders, woodworking machines, drilling machines, pick-and-place machines, guillotines, special-purpose vehicles etc.

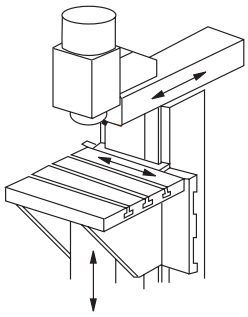

Position on milling machine

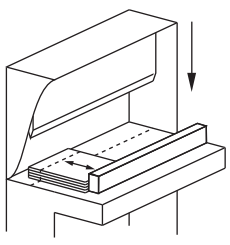

Position or quantity

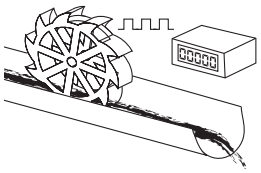

Flow rate

© Fritz Kübler GmbH, subject to errors and changes. 07/2015

LED pulse counters | 6 count modes (DC) | Codix 521

Block diagram

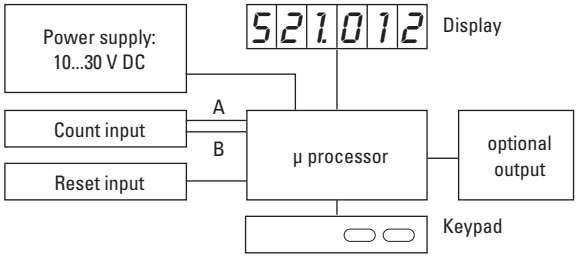

Terminal assignment

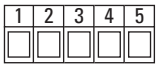

PIN	without optocoupler
1	10 ... 30 V DC
2	0 V GND
3	INP A
4	INP B
5	Reset

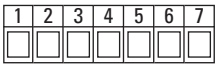

PIN	with optocoupler (NPN)
1	10 ... 30 V DC
2	0 V GND
3	INP A
4	INP B
5	Reset
6	Emitter
7	Collector

Dimensions

Dimensions in mm [inch]

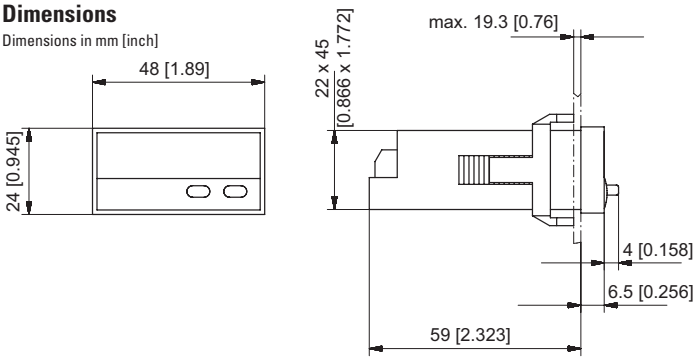

Front bezel for clip mounting (included in delivery)

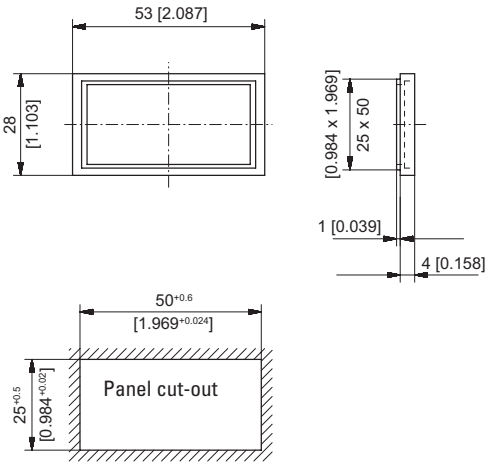

Front bezel for screw mounting (included in delivery)

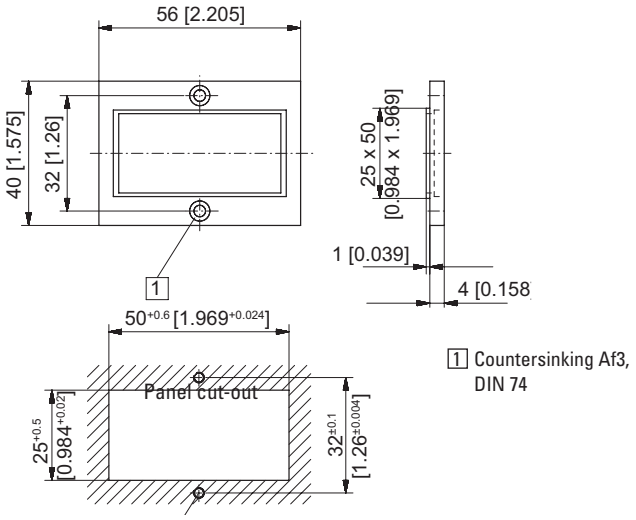

1 Countersinking Af3, DIN 74

© Fritz Kübler GmbH, subject to errors and changes. 07/2015