# SMARTSCAN INFORMATION




# MULTIFUNCTION SAFETY UNITS HANDBOOK

Smartscan Ltd, Pywell Road, CORBY, NN17 5XJ, UK, Tel: +44 (0) 1536 401313,
Fax: +44 (0) 1536 268954, Email: sales@smartscan.com, www.smartscan.com

**CONTENTS** **Page**


| | |
|---|---|
| INTRODUCTION | 5 |
| MULTIFUNCTION SAFETY UNIT 011-149 | 8 |
| MULTIFUNCTION SAFETY UNIT 011-160 | 12 |
| MULTIFUNCTION SAFETY UNIT 011-151 | 18 |
| MULTIFUNCTION SAFETY UNIT 011-155 | 23 |


SMARTSCAN

**www.smartscan.com**



Smartscan Multifunction Safety Unit (MFU) provides relay output switching options. They are typically used with the Smartscan 1000 Series Light Curtains where a relay output option is required as opposed to the two fail-safe electronic output switches provided by the light curtain.

The MFU Type **011-149** is effectively a safety relay module and, just like any other proprietary safety relay, it provides relay output switching contacts and a choice of control functions. For example auto/manual reset and external device monitoring.

An, MFU Type **011-160** has much more to offer. Not only does it provide inputs for the emergency stop function but it also has two further sets of inputs for connecting up to two light curtains. The monitored output switching contacts are rated at 250V AC, 2A with two additional electronic outputs for status indication etc. Other features include selectable auto/manual reset modes, external device monitoring (EDM) and LED indicators for all input and output channels. The unit is automatically self testing and with simultaneous monitoring between related channels it ensures the unit is suitable for SIL 3 and PL e (Category 4) control systems as defined in EN62061 and EN ISO 13849 (BS EN 954-1).

MFU Type **011-151** further enhances the Smartscan range of multifunction safety units. The unit incorporates a light curtain muting facility, designed specifically for those systems that require the light curtain detection zone to be inhibited, or muted, during specific periods of a machine's operating cycle. Muting allows access through the light curtain for the passage of material or for a person to load and unload parts through the light curtain during safe periods without interrupting the machines operating cycle.

MFU Type 011-151 provides a dual channel safety monitored input for automatically muting the light curtain during safe periods of machine operation. Mute signals are often derived from the machine control system or from external sensors or switches. It also provides dual inputs for a Series 1000 light curtain and a two channel emergency stop system.

The monitored safety output relay switches are rated at 250V AC, 2A, for connection to a power-switching device or directly to a machines final control element. Two electronic outputs are provided, one for guard status indication and the other to indicate a 'mute on' condition. Both are for direct connection to a PLC or indicator lamps etc.

Other features include external device monitoring (EDM) and LED indicators on all inputs and outputs.

Monitoring between associated input channels ensures the unit is suitable for SIL 3 and PL e (Category 4) control systems as defined in EN62061 and EN ISO 13849 (BS EN 954-1).

MFU Type **011-155** has been designed specifically for entry/exit applications where the light curtain is positioned across a conveyor. The control module provides two safety monitored inputs for signals that automatically mute the associated light curtain during safe periods of the machine operation. Mute signals are usually derived from external PE sensors, limit switches or the machine control system.

For additional integrity a third mute input channel (mute enable) is provided. This input should be connected to a 'conveyor run' signal to enable a mute condition, ONLY when the associated conveyor is 'running'. The 011-155 also provides dual inputs for a 1000 Plus Series light curtain and a 'guard override' function. The override facility enables the light curtain's safety output relays to be negated for a short period. This facility is essential in the packaging industry for light curtains that are positioned across conveyors that prevent access to personnel but allow pallet loads to pass through.

The monitored safety output relay switches are rated at 250V AC, 2A, for connection to a power-switching device or directly to a machines final control element.

Electronic outputs are provided, one for guard status indication and the other for mute indication.

The MFU also includes external device monitoring (EDM) and visual indicators on all inputs and outputs.

Monitoring between associated input channels ensures the unit is suitable for SIL 3 and PL e (Category 4) control systems as defined in EN 62061 and EN ISO 13849 (BS EN 954-1).

## Multifunction Safety Unit Type 011-149

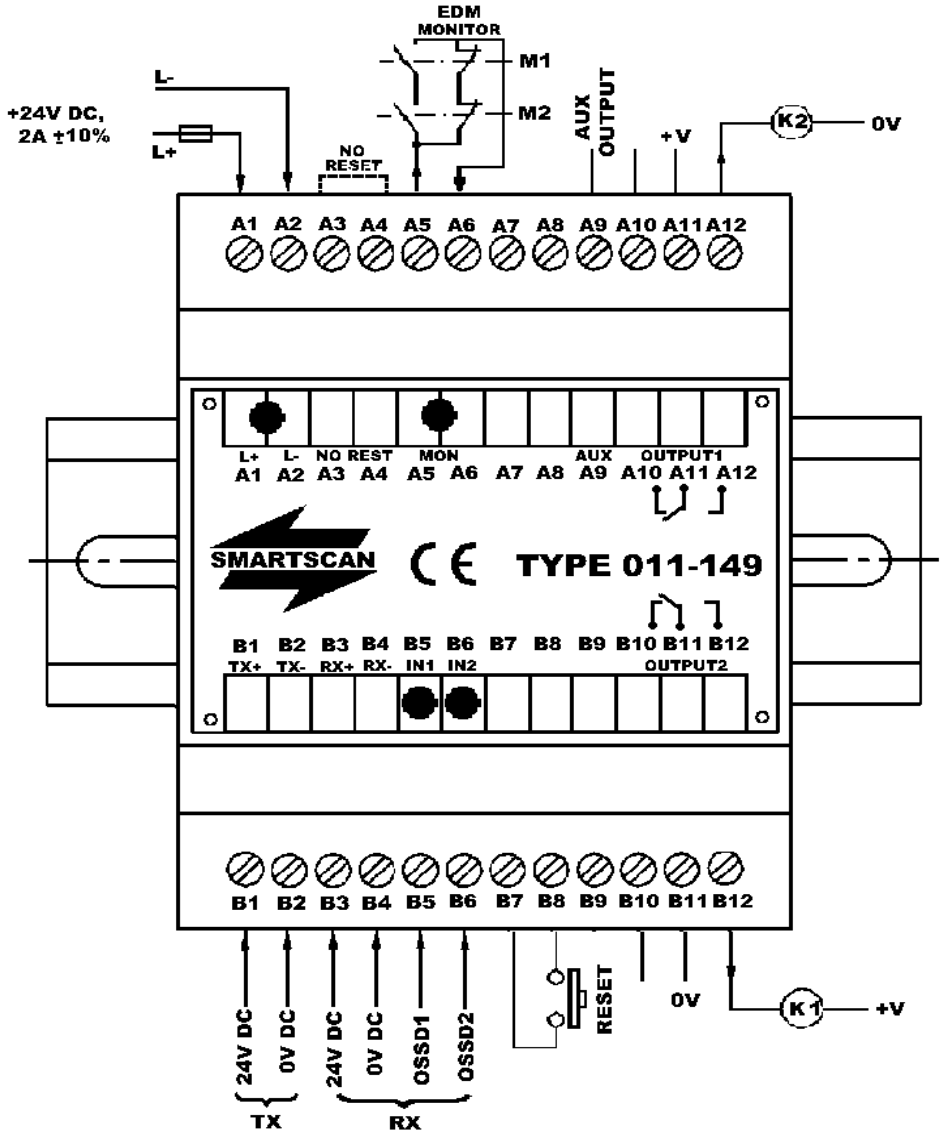


## Status Indicators

| Function | Colour | Status |
|---|---|---|
| Power | Red | LED ON when power ON |
| Inputs | Green | LED ON when input ON |
| EDM | Amber | ON when EDM active |

## Features - Type 011-149

- Dual safety inputs for connecting the light curtain
- Safety monitored output relays. Contacts rated at 250V AC, 4A
- Auxiliary electronic output for status indication etc.
- Reset function
- External Device Monitor (EDM)
- LED status indicators
- Din rail mounting - 70mm enclosure
- Built to EN ISO 13849 PL d.

## Specification - Type 011-149

| | |
|---|---|
| Response time | 10ms max |
| Operating temperature | 0° to +50°C |
| Enclosure rating | IP40 |
| Enclosure | 70mm DIN rail mounting<br>(H x W x D) 90x70x60mm |
| Power supply requirements | 24V DC ± 10% regulated |
| Current consumption | 100mA (NO LOAD) |
| Status indicators | LED's, power on + lockout + output |
| Classification | EN 62061 SIL 2, EN ISO 13849 PL d |

| **INPUTS** | |
|---|---|
| Dual safety monitored inputs | 24V DC = ON, 0V = OFF |
| External device monitoring (EDM) | Use voltage free switch contacts (N/O & N/C) |
| Reset function (selectable) | Use voltage free switch contacts |

| **OUTPUTS** | |
|---|---|
| Safety output relays | 2 x fail safe change over contacts, each rated at 250V AC, 4A |
| Auxiliary solid-state switch (non safety) | 1 electronic output switch, rated at 24V DC, 500mA |

## Electrical connections - Type 011-149

**Terminals A1 and A2 – Power supply input** - Connect a suitably stabilised 24V DC power supply to terminals A1 = +24V DC and A2 = 0V DC. The current consumption of the MFU with no load applied on the output switching terminals is 100mA.

**Note**: When in a tripped condition there will be no 24V DC supply to the transmitter head on terminal B1.

**Terminal A3 and A4 – Automatic reset mode -** Link terminal A3 to terminal A4 if automatic reset is required. In the automatic reset mode no connections are required at terminal B7 and terminal B8. To simplify set-up link A3 to A4. Remove link after set-up if latched mode is required.

**Terminals A5 and A6 – External device monitor (EDM) -** Auxiliary change over contacts from an external power-switching device are connected across terminals A5 and A6. The monitoring circuit checks that the power switching devices both de-energise at the same time the MFU safety output switches de-energise. If one of the power switching devices fails to de-energise at this time the MFU will trip.

**Note**: If the EDM circuit is not used it is necessary to link terminals A5 to A6 otherwise the system will default into a lockout condition. If connection is missing between A5 & A6 there will be no 24V DC supply to the transmitter head on terminal B1.

**Terminals A7 and A8 – no connections**

**Terminal A9 – Auxiliary electronic switching output -** The Auxiliary switching output should only be used for non-safety critical applications, for example, connecting an indicator lamp or as feedback to a PLC that the safety outputs have de-energised.

The auxiliary output, derived from safety input OSSD2, energises when output switches 1 and 2 energise. Auxiliary output ON = 24V DC and OFF = 0V DC.

**Terminal A10, A11 and A12 – Safety output 1 switch contacts** - Terminals A10, A11 and A12 are the output connections to safety relay 1 changeover switching contacts. Terminal A11 is the common output, with terminal A12 as the normally open switch and A10 as the normally closed switch. Normally terminals A11 and A12 would be connected to one channel of a machine's stop circuitry, for example, via an external power-switching relay or directly to a safe PLC input or a machines final control element.

**Terminals B1 – 24V DC supply-** + 24V DC output for connecting to the light curtain Transmitter head (TX).

**Terminals B2 – 0V DC supply -** 0V DC output for connecting to the light curtain TX.

**Terminals B3 – 24V DC supply -** + 24V DC output for connecting to the light curtain RX.

**Terminals B4 – 0V DC supply -** 0V DC output for connecting to the light curtain RX.

**Terminals B5 and B6 – light curtain inputs (OSSD1 and OSSD2)** Connect the electronic output switches (OSSD1 and OSSD2) of a 1000 Plus Series light curtain to terminals B5 and B6 respectively.

**Terminals B7 and B8 – Reset -** If the MFU is required to be in the latch mode a suitable switch should be connected between terminal B7and terminal B8. If the safety output relays de-energise a depression of the switch is required to re-energise the output switches to an ON condition.

The MFU's safety output switches will only re-energise when the reset switch is depressed and then released.

If the MFU is required to operate in an automatic reset condition do not connect a switch to terminals B7 and B8. However, it is necessary to link terminal A3 to terminal A4 before an automatic reset condition can be established.

**Terminals B9 – No connections**

**Terminal B10, B11 and B12 – Safety output 2 switch contacts** - Terminals B10, B11 and B12 are the output connections to safety relay 2 changeover switching contacts. Terminal B11 is the common output, with terminal B12 as the normally open switch and B10 as the normally closed switch. Normally terminals B11 and B12 would be connected to one channel of a machine's stop circuitry, for example, via an external power switching relay, directly to a safe PLC input or to a machines final control element. Connect terminals A5 and A6 to one channel of a machine's stop circuitry, for example, via an external power-switching relay, directly to a safe PLC input or a machines final control element.

**Note**: If a single channel safety circuit is used link terminals A12 and B11. Terminals A11 and B12 are then connected to the machine's safety circuit. Connecting in this way links safety output switch 1 and safety output switch 2 in a series configuration.

### Multifunction safety Unit Type 011-160

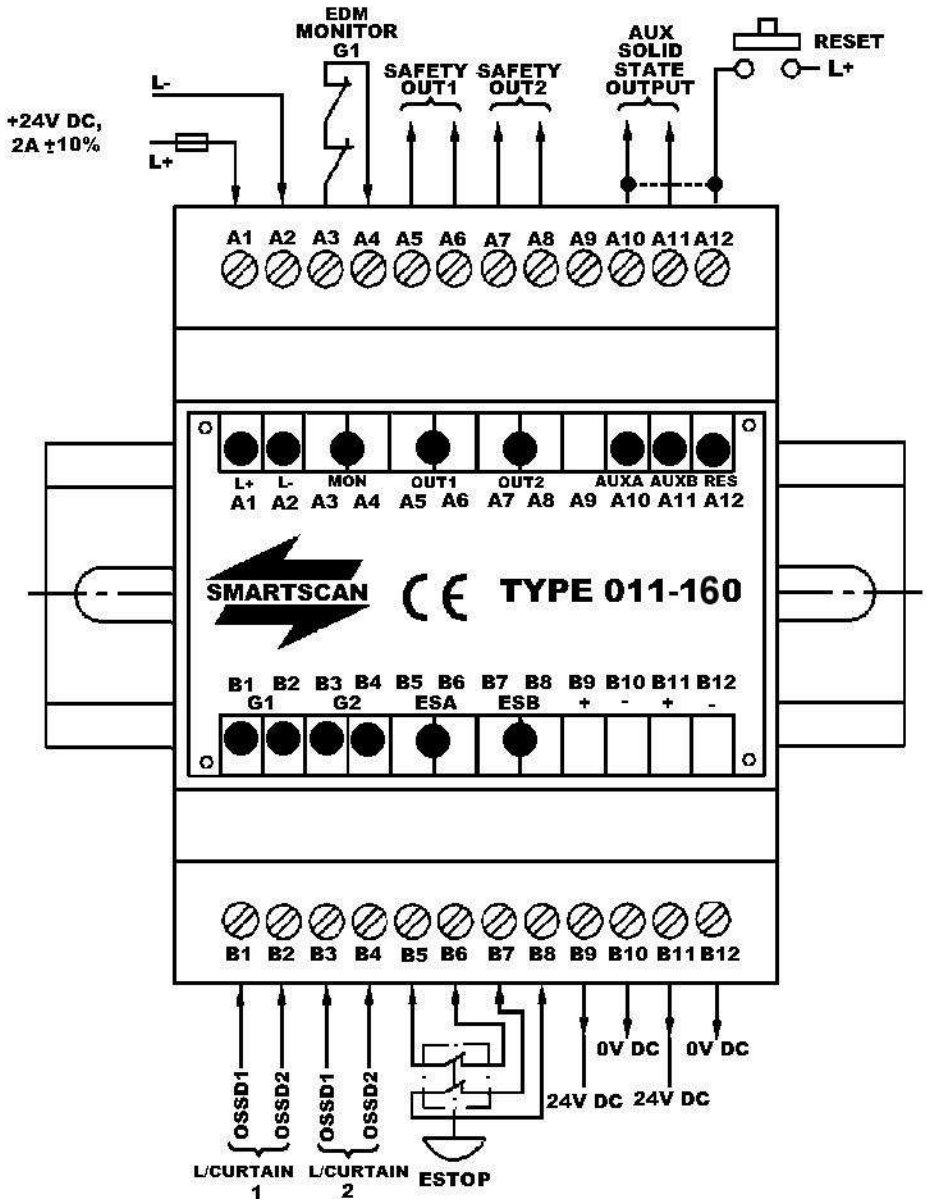


## Status Indicators

| Function | Colour | Status |
|---|---|---|
| Inputs | Green | LED ON when input ON |
| Outputs | Green | LED ON when output ON |
| Reset | Amber | LED ON , when reset input 'ON<br>(Auto reset mode - LED on continuously) |
| EDM | Amber | ON when EDM inputs are active |
| Status | Red + Red | Both Steady ON = system ok<br>Both Flashing = EDM fault<br>Alternate Flashing ON /OFF = lockout |
| | Red + Off | A1 flashing = OSSD2 G1/G2 disparity fault or E Stop 2 disparity fault |
| | Off + Red | A2 flashing = OSSD1 G1/G2 disparity fault or E Stop 1 disparity fault |

## Features - Type 011-160

- Two dual safety inputs for connecting up to 2 light curtains
- Dual inputs for connecting the emergency stop circuit
- Safety monitored output relays. Contacts rated at 250V AC, 2A
- Auxiliary electronic output switches for status indication etc
- Reset function
- External Device Monitoring (EDM)
- LED indicators for all inputs and outputs
- DIN rail mounting – 70mm enclosure
- Automatic self testing
- Simultaneous monitoring between related channels
- Built to EN ISO 13849, PL e

## Specification - Type 011-160

| | |
|---|---|
| Response time | 25ms max |
| Operating temperature | 0° to +50°C |
| Enclosure rating | IP40 |
| Enclosure | 70mm DIN rail mounting<br>( H x W x D) 90x70x60mm |
| Power supply | 24V DC ± 10% regulated |
| Current consumption | 150mA (NO LOAD) |
| Status indicators | LED's for all inputs and outputs |
| Classification | EN 62061 SIL 3, EN ISO 13849 PL e |

| **INPUTS** | |
|---|---|
| Dual inputs for light curtain 1<br>Dual inputs for light curtain 2 | 24V DC = ON, 0V = OFF - Disparity between related channels = 100ms max. |
| Dual inputs for emergency-stop circuit | Use voltage free switch contacts - Disparity between channels = 100ms max. |
| External device monitoring (EDM) | Use voltage free switch contacts (N/C) |
| Reset function (selectable) | 24V DC = ON, 0V = OFF |

| **OUTPUTS** | |
|---|---|
| Safety output relays | 2 x N/O - fail safe contacts, each rated at 250V AC, 2A |
| Auxiliary solid-state switches (non safety) | 2 electronic output switches, each rated at 24V DC, 500mA |

## Electrical connections - Type 011-160

**Terminals A1 and A2 – Power supply input -** Connect a suitably stabilised 24V DC power supply to terminals A1 = +24V DC and A2 = 0V DC. The current consumption of the MFU with no load applied on the output switching terminals is 150mA.

**Terminals A3 and A4 – External device monitor (EDM) -** Normally closed switch contacts, in series from the external power switching devices are connected across terminals A3 and A4. The monitoring circuit checks that the power switching devices both de-energise at the same time the MFU safety output switches de-energise. If one or both of the power switching devices fail to de-energise at this time the MFU goes into a lockout condition, turning all output switches off. This condition is shown by the 2 red LEDs (A1 and A2) will both flash on and off to indicate failure of EDM and the unit is now in a lockout condition.

To reset from a lockout condition it is necessary to remove the 24V DC supply from the MFU and then re-apply.

If the EDM circuit is not used it is necessary to link terminals A3 to A4 otherwise the system will go to a lockout condition at the next demand upon the safety system.

**Terminals A5 and A6 – Safety output 1 switch contact -** Connect terminals A5 and A6 to one channel of a machine's stop circuitry, for example, via an external power-switching relay, directly to a safe PLC input or a machines final control element.

**Terminals A7 and A8 – Safety output 2 switch contact -** Connect terminals A7 and A8 to one channel of a machine's stop circuitry, for example, via an external power-switching relay, directly to a safe PLC input or a machines final control element.

If a single channel safety circuit is used link terminals A6 and A7. Terminals A5 and A8 are then connected to the machine's safety circuit. Connecting in this way links safety output switch 1 and safety output switch 2 in a series configuration.

**Terminal A9 – No connection**

**Terminal A10 – Auxiliary electronic switching output 1** - The Auxiliary switching output should only be used for non-safety critical

applications, for example connecting an indicator lamp or as feedback to a PLC to confirm the safety outputs have de-energised.

**Terminal A11 – Auxiliary electronic switching output 2 -** The Auxiliary switching output should only be used for non-safety critical applications, for example connecting an indicator lamp or as feedback to a PLC to confirm the safety outputs have de-energised.

Auxiliary outputs 1 and 2 both energise when safety output switches 1 and 2 energise and both de-energise when the safety outputs de-energise. Auxiliary outputs ON = 24V DC and OFF = 0V DC.

**Terminal A12 – Reset -** If the MFU is required to be in the latch mode a suitable switch should be connected between terminal A12 and the 24V DC supply. If the safety output relays de-energise a depression of the switch is required to re-energise the output switches to an ON condition.

The MFU's safety output switches will only re-energise when the reset switch is depressed and then released.

If the MFU is required to operate in an automatic reset condition do not connect a switch to terminal A12. However, it is necessary to link terminal A12 to terminal A10 before an automatic reset condition can be established.

**Terminal B1 and B2 – light curtain 1 inputs (OSSD1 and OSSD2) -** Connect the electronic output switches (OSSD1 and OSSD2) of a 1000 Plus Series light curtain to terminals B1 and B2 respectively.

**Note:** An internal circuit monitors disparity between the two input channels. If the inputs do not switch together (within 100ms of each other) the system will go into a lockout condition. This condition is shown for an OSSD 1 fault as A2 red LED flashing and A1 red LED will be off. OSSD2 fault will have A1 red LED flashing and A2 red LED will be off.
If A1 red LED and A2 red LED flash alternately then the unit is in a lockout condition. To reset from a lockout condition it is necessary to remove the 24V DC supply from the MFU and then re-apply.

**Terminal B3 and B4 – light curtain 2 inputs (OSSD1 and OSSD2) -** Connect the electronic output switches (OSSD1 and OSSD2) of a 1000 Plus Series light curtain to terminals B3 and B4 respectively.

**Note:** An internal circuit monitors disparity between the two input channels. If the inputs do not switch together (within 100ms of each other) the system will go into a lockout condition. This condition is shown for an OSSD1 fault as A2 red LED flashing and A1 red LED will be off. OSSD2 fault will have A1 red LED flashing and A2 red LED will be off.
If A1 red LED and A2 red LED flash alternately then the unit is in a lockout condition. To reset from a lockout condition it is necessary to remove the 24V DC supply from the MFU and then re-apply.

**Important** If either terminal B1/B2 or B3/B4 are not used, for example, if only one light curtain is employed for a particular application, it is necessary to link the unused input terminals to the 24V DC supply. If not the MFU's output switches will not energise.

**Terminals B5/B6 and B7/B8 – dual channel emergency stop circuit -** Connect one channel of the machines emergency stop circuit between terminals B5 and B6 and the second channel between terminals B7 and B8.

**Note:** An internal circuit monitors for short circuits and switching disparity between the two input channels. If the inputs do not switch together (within 100ms of each other) the system will go into a lockout condition. This configuration meets the requirements for 'control reliability' and cannot be used in a single channel configuration. This condition is shown for an E Stop1 fault as A2 red LED flashing and A1 red LED will be off. E Stop2 fault will have A1 red LED flashing and A2 red LED will be off.
If A1 red LED and A2 red LED flash alternately then the unit is in a lockout condition. To reset from a lockout condition it is necessary to remove the 24V DC supply from the MFU and then re-apply.

**Important** If the emergency stop inputs are not used it is necessary to link terminals B5 to B6 and terminals B7 to B8. If not the safety output switches will not energise.

**Terminals B9 and B11 – 24V DC supply -** Additional + 24V DC outputs for connecting to the light curtains etc.

**Terminals B10 and B12 – 0V DC supply -** Additional 0V DC outputs for connecting to the light curtains etc.

## Multifunction Safety Unit Type 011-151

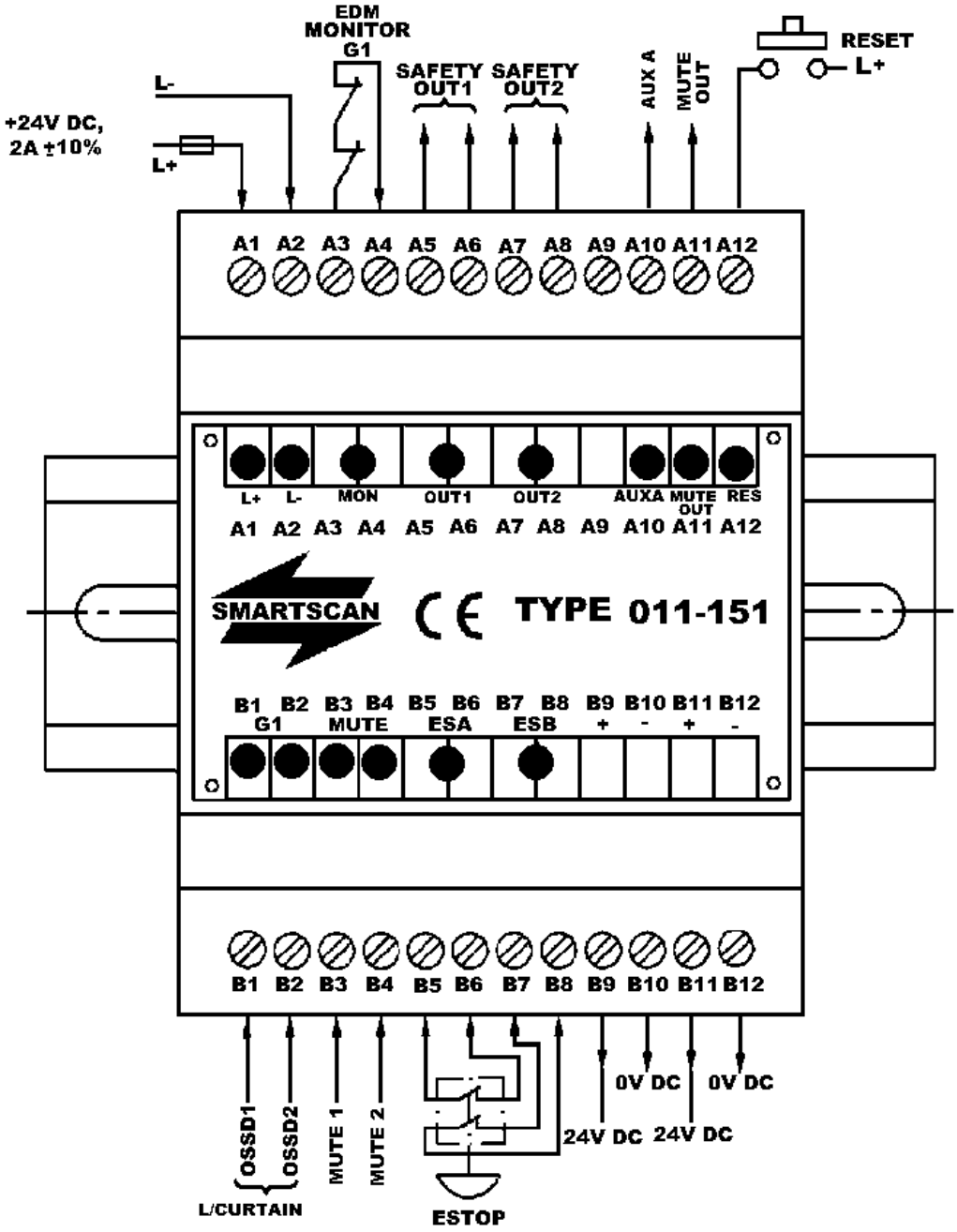


## Status Indicators

| Function | Colour | Status |
|---|---|---|
| Inputs | Green | LED ON when input ON |
| Outputs | Green | LED ON when output ON |
| Reset | Amber | LED ON , when reset input is ‘ON |
| EDM | Amber | ON when EDM inputs are active |
| Status | Red + Red | Steady ON = system ok<br>Flashing ON /OFF = lockout |

## Features - Type 011-151

- Dual safety inputs for connecting the light curtain
- Dual inputs for muting the light curtain
- Dual inputs for connecting the emergency stop circuit
- Safety monitored output relays. Contacts rated at 250V AC, 2A
- Auxiliary electronic output for mute indication
- Reset function
- External Device Monitoring (EDM)
- LED indicators for all inputs and outputs
- DIN rail mounting – 70mm enclosure
- Automatic self testing
- Monitoring between related channels
- Built to EN ISO 13849 PL e

## Specification - Type 011-151

| | |
|---|---|
| Response time | 25ms max |
| Operating temperature | 0° to +50°C |
| Enclosure rating | IP40 |
| Enclosure | 70mm DIN rail mounting<br>(H x W x D) 90x70x60mm |
| Power supply requirement | 24V DC ± 10% regulated |
| Current consumption | 150mA (NO LOAD) |
| Status indicators | LED's for all inputs and outputs |
| Classification | EN62061 SIL 3, EN ISO 13849 PL e |

| **INPUTS** | |
|---|---|
| Dual inputs for light curtain | 24V DC = ON, 0V = OFF - Disparity between channels =500ms max. |
| Dual inputs for mute sensors | 24V DC = ON, 0V = OFF - Disparity between channels =10 seconds maximum. |
| Dual inputs for emergency-stop circuit | Use voltage free switch contacts - Disparity between channels =100 ms max. |
| External device monitoring (EDM) | Use voltage free switch contacts (N/C) |
| Reset function (selectable) | 24V DC = ON, 0V = OFF |

| **OUTPUTS** | |
|---|---|
| Safety output relays | 2 x N/O - fail safe contacts, each rated at 250V AC, 2A |
| Auxiliary solid-state switch (non safety) | Electronic output switch, rated at 24V DC, 500mA |
| Auxiliary solid-state switch for mute indication | Electronic output switch, rated at 24V DC, 500mA |

## Electrical connections – MFU 011-151

**Terminals A1 and A2 – Power supply input -** Connect a suitably stabilised 24V DC power supply to terminals A1 = +24V DC and A2 = 0V DC. The current consumption of the MFU with no load applied on the output switching terminals is 150mA.

**Terminals A3 and A4 – External device monitor (EDM) -** Normally closed switch contacts, in series from the external power switching devices are connected across terminals A3 and A4. The monitoring circuit checks that the power switching devices both de-energise at the same time the MFU safety output switches de-energise. If one or both of the power switching devices fail to de-energise at this time the MFU goes into a lockout condition, turning all output switches off.

To reset from a lockout condition it is necessary to remove the 24V DC supply from the MFU and then re-apply.

If the EDM circuit is not used it is necessary to link terminals A3 to A4 otherwise the system will go to a lockout condition at the next demand upon the safety system.

**Terminals A5 and A6 – Safety output 1 switch contact** - Connect terminals A5 and A6 to one channel of a machine's stop circuitry, for example, via an external power-switching relay, directly to a safe PLC input or a machines final control element.

**Terminals A7 and A8 – Safety output 2 switch contact** - Connect terminals A7 and A8 to one channel of a machine's stop circuitry, for example via an external power-switching relay, directly to a safe PLC input or a machines final control element.

If a single channel safety circuit is used link terminals A6 and A7. Terminals A5 and A8 are then connected to the machine's safety circuit. Connecting in this way links safety output switch 1 and safety output switch 2 in a series configuration.

**Terminal A9 – No connection**

**Terminal A10 – Auxiliary electronic switching output 1** - The Auxiliary switching output should only be used for non-safety critical application, for example connecting an indicator lamp or as feedback to a PLC to confirm the safety outputs have de-energised.

The auxiliary output energises when safety output switches 1 and 2 energise and de-energises when the safety outputs de-energise. Auxiliary output ON = 24V DC and OFF = 0V DC.

**Terminal A11 – Auxiliary electronic switch – (mute out)** The Auxiliary switching circuit energises when the light curtain is muted, e.g. when suitable signals have been applied to terminals B3 and B4. The output switch is normally used for connecting an indicator lamp or as feedback to a PLC to confirm safety light curtain inputs at terminals B1 and B2 are overridden e.g. in a muted condition.

**Terminal A12 – Reset -** A suitable switch should be connected between terminal A12 and the 24V DC supply. If the safety output relays de-energise a depression of the switch is required to re-energise the output switches to an ON condition.

The MFU's safety output switches will only re-energise when the reset switch is depressed and then released.

**Terminal B1 and B2 – light curtain inputs (OSSD1 and OSSD2)** Connect the electronic output switches (OSSD1 and OSSD2) of a light curtain to terminals B1 and B2 respectively.

**Note:** An internal circuit monitors disparity between the two input channels. If the inputs do not switch together (within 500ms of each other) the system will go into a lockout condition.

**Important** If terminals B1/B2 are not used it is necessary to link them to the 24V DC supply. If not the MFU's output switches will not energise.

**Terminal B3 and B4 – mute input signals -** Connect suitable mute initiating signals to terminals B3 and B4 respectively. The mute signals override the light curtains operation therefore the inputs should only be active during safe periods of the machinery's operating cycle.

**Note:** An internal circuit monitors disparity between the two mute input channels. If the inputs do not switch within 10 seconds of each other the system will go into a lockout condition.

**Terminals B5/B6 and B7/B8 – dual channel emergency stop circuit -** Connect one channel of the machine's emergency stop circuit between terminals B5 and B6 and the second channel between terminals B7 and B8.

**Note:** An internal circuit monitors for short circuits and switching disparity between the two input channels. If the inputs do not switch together (within 100ms of each other) the system will go into a lockout condition. This configuration meets the requirements for 'control reliability' and cannot be used in a single channel configuration.

**Important** If the emergency stop inputs are not used it is necessary to link terminals B5 to B6 and terminals B7 to B8. If not the safety output switches will not energise.

**Terminals B9 and B11 – 24V DC supply -** Additional + 24V DC outputs for connecting to the light curtains etc.

**Terminals B10 and B12 – 0V DC supply -** Additional 0V DC outputs for connecting to the light curtains etc.

## Multifunction Safety Unit Type 011-155

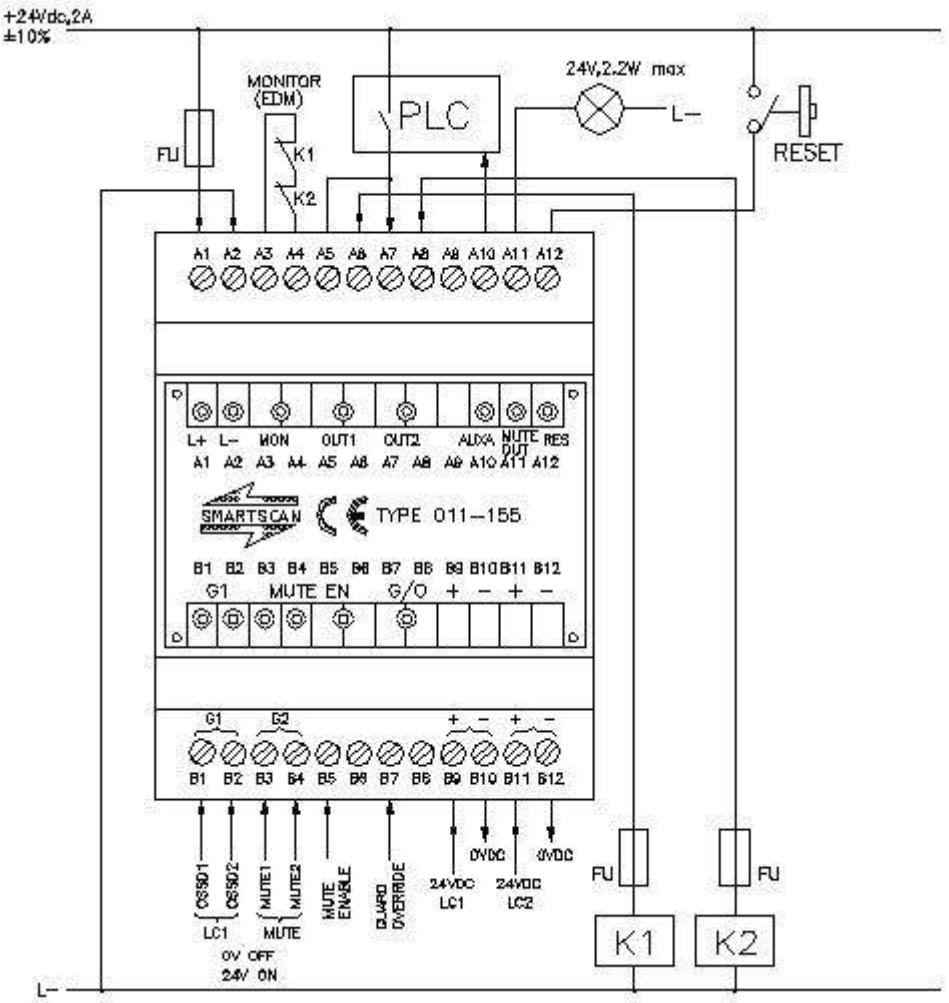


## Status Indicators

| Function | Colour | Status |
|---|---|---|
| Inputs | Green | LED ON when input ON |
| Outputs | Green | LED ON when output ON |
| Reset | Amber | LED ON , when reset input is ON |
| Guard override | Green | LED ON, when override input is ON |
| EDM | Amber | ON when EDM inputs are active |
| Status | Red<br>+ Red | Steady ON = lockout<br>Flashing ON /OFF = system ok |

## Features - Type 011-155

- Dual safety inputs for connecting the light curtain
- Dual inputs for muting the light curtain
- 3rd mute input (mute enable) for increased safety integrity
- Safety monitored output relays. Contacts rated at 250V AC, 2A
- Monitored electronic output for mute indication
- Reset control function
- External Device Monitoring (EDM)
- LED indicators for all inputs and outputs
- Guard override function
- Electronic output for guard status indication
- Simultaneous monitoring between related channels
- Built to EN ISO 13849 PL e

## Specification - Type 011-155

| | |
|---|---|
| Response time | 25ms max |
| Operating temperature | 0° to +50°C |
| Enclosure rating | IP40 |
| Enclosure | 70mm DIN rail mounting<br>(H x W x D) 90x70x60mm |
| Power supply requirement | 24V DC ± 10% regulated |
| Current consumption | 150mA (NO LOAD) |
| Status indicators | LED's for all inputs and outputs |
| Classification | EN 62061 SIL 3, EN ISO 13849 PL e |

| **INPUTS** | |
|---|---|
| Dual inputs for light curtain | 24V DC = ON, 0V = OFF - Disparity between channels =500ms max. |
| Dual inputs for mute sensors | 24V DC = ON, 0V = OFF - Disparity between channels = 2 seconds maximum |
| 3rd mute input (mute enable) | 24V DC = ON, 0V = OFF |
| External device monitoring (EDM) | Use voltage free switch contacts (N/C) |
| Reset function | 24V DC = ON, 0V = OFF |
| Override function | 24V DC = ON, 0V = OFF (3 min time-out) |

| **OUTPUTS** | |
|---|---|
| Safety output relays | 2 x N/O - fail safe contacts, each rated at 250V AC, 2A |
| Auxiliary solid-state switch (non safety) | Electronic output switch, rated at 24V DC, 500mA |
| Monitored solid-state switch for mute indication | Electronic output switch, rated at 24V DC, 500mA |

Electrical connections – MFU 011-155

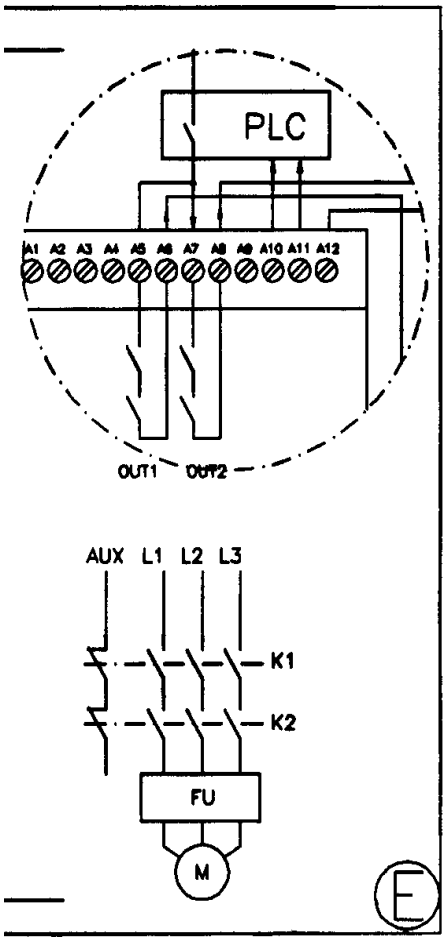


**Terminals A1 and A2 – Power supply input -** Connect a suitably stabilised 24V DC power supply to terminals A1 = +24V DC and A2 = 0V DC. The current consumption of the MFU with no load applied on the output switching terminals is 150mA.

**Terminals A3 and A4 – External device monitor (EDM) -** Normally closed switch contacts, in series from the external power switching devices, are connected across terminals A3 and A4. The monitoring circuit checks that the power switching devices both de-energise at the same time the MFU safety output switches de-energise. If one or both of the power switching devices fails to de-energise at this time the MFU goes into a lockout condition, turning all output switches off.

To reset from a lockout condition it is necessary to remove the 24V DC supply from the MFU and then re-apply.

If the EDM circuit is not used it is necessary to link terminals A3 to A4 otherwise the system will go to a lockout condition at the next demand upon the safety system.

**Terminals A5 and A6 – Safety output 1 switch contact** - Connect terminals A5 and A6 to one channel of a machine's stop circuitry, for example, via an external power-switching relay, directly to a safe PLC input or a machines final control element – refer to drawing opposite.

**Terminals A7 and A8 – Safety output 2 switch contact** - Connect terminals A7 and A8 to one channel of a machine's stop circuitry, for example, via an external power-switching relay, directly to a safe PLC input or a machines final control element - refer to drawing opposite.

If a single channel safety circuit is used link terminals A6 and A7. Terminals A5 and A8 are then connected to the machine's safety circuit. Connecting in this way links safety output switch 1 and safety output switch 2 in a series configuration.

**Terminal A9** – No connection

**Terminal A10 – Auxiliary electronic switching output 1** - The Auxiliary switching output should only be used for non-safety critical application. For example connecting an indicator lamp or as feedback to a PLC to confirm the safety outputs have de-energised.

The auxiliary output is on when OUT 1 and 2 energise. They are off when OUT 1 and 2 are de-energised. Auxiliary output ON = 24V DC and OFF = 0V DC.

**Terminal A11 – Monitored electronic switch – (mute out).**
A monitored switching circuit energises when the light curtain is in a muted condition, e.g. when suitable signals have been applied to terminals B3 and B4. This output is for connection of a 24V DC 2.2W filament lamp. The lamp will illuminate when the light curtain is in a muted condition.

**Warning:** The system must have a 24V, 2.2 watt filament lamp connected between A11 and 0V for the system to work.

**Terminal A12 – Reset -** A suitable switch should be connected between terminal A12 and the 24V DC supply. If the safety output relays de-energise then a depression of the switch is required to re-energise the output switches to an ON condition.

The MFU's safety output switches will only re-energise when the reset switch is depressed and then released.

**Terminal B1 and B2 – light curtain inputs (OSSD1 and OSSD2) -** Connect the electronic output switches (OSSD1 and OSSD2) of a light curtain to terminals B1 and B2 respectively.

**Note:** An internal circuit monitors disparity between the two input channels. If the inputs do not switch within 500ms of each other the system will go into a lockout condition.

**Terminal B3 and B4 – mute input signals -** Connect suitable mute initiating signals to terminals B3 and B4 respectively. The mute signals override the light curtains operation therefore the inputs should only be active during safe periods of the machinery's operating cycle.

**Note:** An internal circuit monitors disparity between switching of the two mute input channels. If the inputs do not respond within 2 seconds of each other the system will trip.

To satisfy the latest Health and Safety requirements the safety system will trip if the light curtain remains in a muted condition for more than 15 minutes.

**Terminals B5 –Third mute input (mute enable)**
For entry/exit applications the input is connected to a conveyor 'run' signal thus initiating a mute condition only when the appropriate conveyor is running. It is a control system requirement that a conveyor 'run' signal be provided, so as to maintain a high level of safety integrity.

**Terminal B6** – no connection

**Terminal B7** – Guard override
Should the guard trip during a period when a pallet is transferring through the light curtain detection zone it is necessary to remove the load from the zone before the light curtain can be reset.

Install the guard override function by connecting a N/O key or push button switch between terminal B7 and +24V dc.

The override function can only be operated if a pallet load is obstructing the detection zone and the light curtain is in a tripped condition.

Operate the override function as follows:

Activate and hold the override switch in the ON position. This will automatically mute the light curtain for a maximum period of three minutes or until the light curtain detection zone has been cleared of the obstruction. If the latter then, as the pallet load passes out from the light curtain, the override function is cancelled and the guard becomes fully active once again without interrupting the machine operating cycle.

**Note:** If the override push button/key switch is released from the ON position the guard override function will be cancelled.

**Terminals B9 and B11 – 24V DC supply -** Additional + 24V DC outputs for connecting to the light curtains etc.

**Terminals B10 and B12 – 0V DC supply -** Additional 0V DC outputs for connecting to the light curtains etc.