Foot-switch
Series F2 UN

Description **F2-U2ZD/U2ZD UN**	Article number **6062720020**

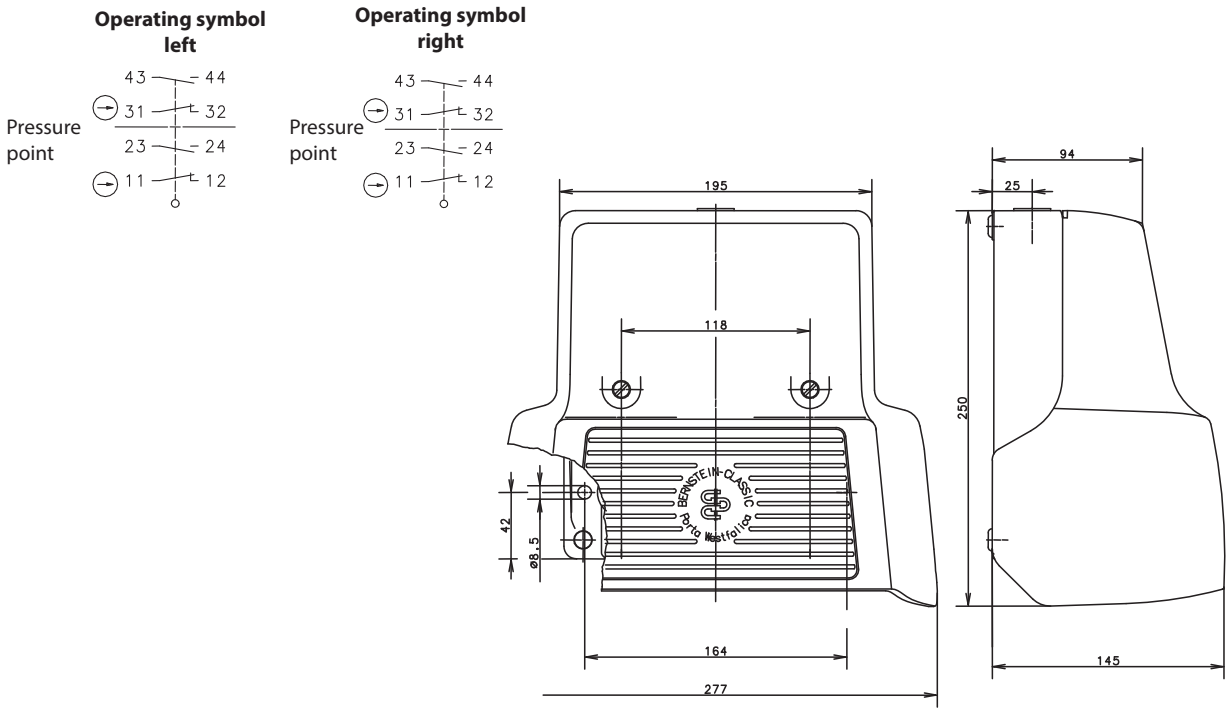

Electrical Data		
Rated insulation voltage	U_i	400 V AC
Conv. thermal current	I_{the}	10 A
Rated operational voltage	U_e	240 V
Utilization category		AC-15, Ue 240 V /Ie 3 A (pedal stop)
Direct opening action	⊖	acc. to IEC/EN 60947-5-1, annex K
Short-circuit protective device		Fuse 10 A gG
Protection class		I

Mechanical data	
Enclosure	AL, die-cast
Protective guard (Accident protection cover UN)	AL, die-cast
Actuator	Foot lever (PA)
Ambient air temperature	-30° C ... +80° C
Contact type	4 NC, 4 NO (Zb)
Operating force	≈ 10 N (pedal centre)
Pressure point	≈ 200 N
Mechanical life	1 x 10^6 operating cycles
Switching frequency	max. 50 / min
Assembly	2 x M8
Connection	screw terminals (M3,5)
Number of connections	16
Protection ground	2 x M4
Conductor cross-sections	Solid: 0,5 ... 1,5 mm^2 or
	Litz wire with ferrules: 0,5 ... 1,5 mm^2
Cable entrance	1 x M20 x 1,5
Weight	≈ 2,6 kg
Protection type	IP65 acc. to IEC/EN 60529

ID for safety engineering	
B10d	2 x 10^6 switching cycles

Standards	
	VDE 0660 T100, DIN EN 60947-1, IEC 60947-1
	VDE 0660 T200, DIN EN 60947-5-1, IEC 60947-5-1
	DIN EN ISO 13849-1

EU Conformity	
	acc. to directive 2006/42/EC

Approvals	
	DGUV
	$_cCSA_{US}$ A300 (same polarity)
	CCC

Notes
Tapped holes not in use must be closed with blind plugs. The degree of protection (IP code) specified applies only to a properly closed protective guard and in connection with the appropriate cable glands or blind plugs.