Latch complete system
Series BF

Description **BF1-SLK**	Article number **6050100001**

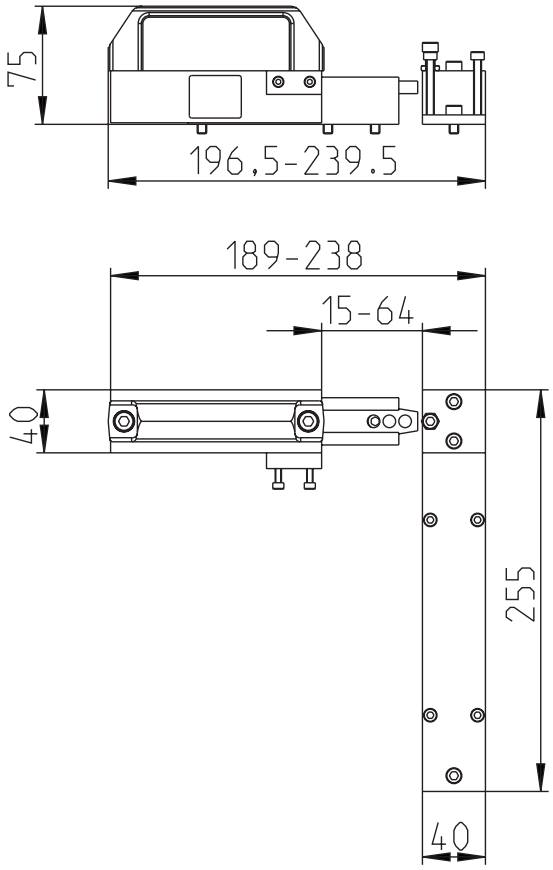

Mechanical data	
Base plate / carrier sections	Aluminium
Handhold	PA
Latch	Steel
Adjustment	Spring plunger
Mechanical life	tbd
Assembly	Door: 3 x M6 Frame: 3 x M6
Weight	≈ 0,80 kg
Installation position	Attached right / left

Standards
Together with a safety switch, the latch serves as a mechanical locking device conforming to DIN EN ISO 12100 and DIN EN ISO 14119.

Notes
A SLK - safety switch can be purchased to match the BF1-SLK. The mounting material is enclosed with the BF1-SLK.

Technical modifications and errors excepted.
The technical datasheet corresponds to the technical state as of 2019-03-13 and will not be removed in case of changes.