THE INFORMATION CONTAINED IN THIS DRAWING IS THE SOLE PROPERTY OF L-COM, INC. ANY REPRODUCTION IN PART OR WHOLE WITHOUT THE WRITTEN PERMISSION OF L-COM, INC. IS PROHIBITED.

REVISIONS			
REV	DESCRIPTION	DATE	APPROVED
L	ECN8182; UPDT DWG FROM MOLDED THUMBSCREW TO METAL TUMBSCREW	11/28/2015	B.ZHANG

MODEL NUMBER	LENGTH	
	FEET	METERS
CTLDVIMM-3	3.0	[.92]
CTLDVIMM-5	5.0	[1.52]
CTLDVIMM-10	10.0	[3.05]
CTLDVIMM-15	15.0	[4.57]

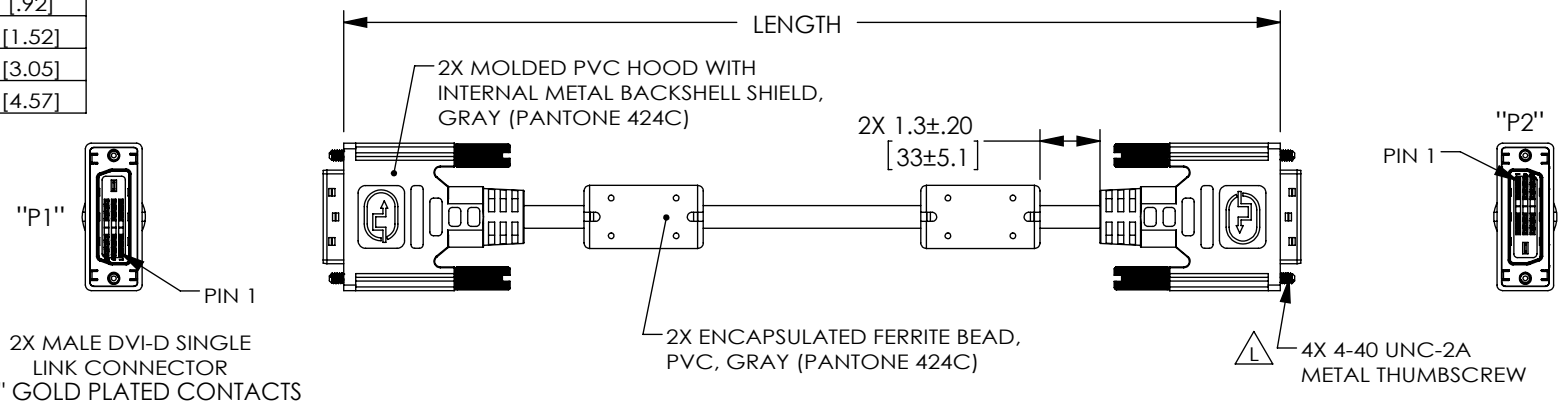

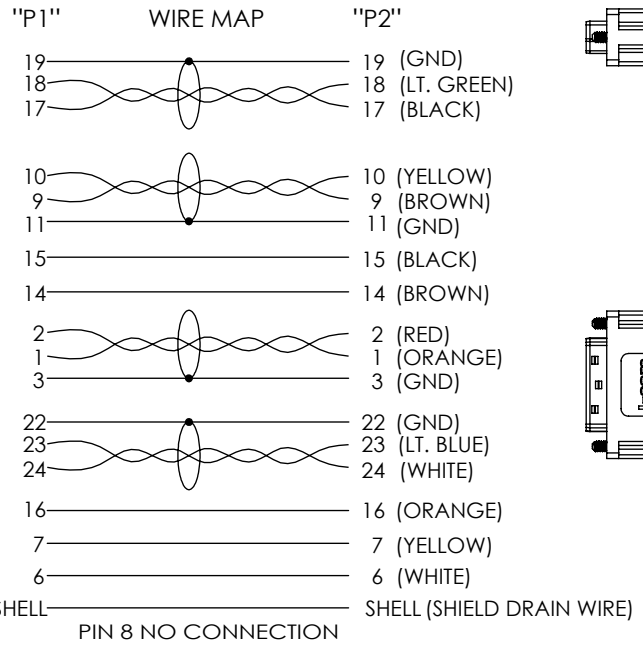

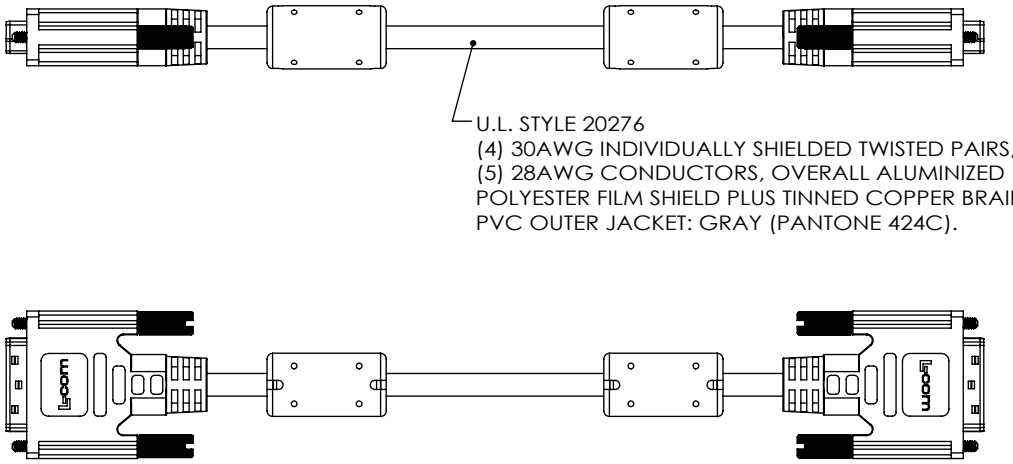

NOTES:

1. CABLE ASSEMBLIES SHALL BE TESTED FOR CONTINUITY.
2. CABLE ASSEMBLIES SHALL BE INDIVIDUALLY PACKAGED IN ACCORDANCE WITH L-COM SPEC. PS-0031.
3. DUST COVERS INSTALLED FOR SHIPPING (NOT SHOWN).

REGULATORY COMPLIANCE:
CE2011/65/EU(RoHS DIRECTIVE)

UNLESS OTHERWISE SPECIFIED,
DIMENSIONS ARE IN INCHES [mm]
OVERALL CABLE LENGTH TOLERANCE:
≤12 [305] = +1 [25] / -0
>12 [305] ≤60 [1524] = +2 [51] / -0
>60 [1524] ≤120 [3048] = +4 [102] / -0
>120 [3048] ≤300 [7620] = +6 [152] / -0
>300 [7620] = +5% / -0%
ALL OTHER DIMENSIONAL TOLERANCES:
.X = ± .2 [5.08]
.XX = ± .02 [.51]
.XXX = ±.005 [.13]
PROJECTION

APPROVALS	DATE
DRAWN BY TJC	12/7/00
CHECKED BY RC	3/2/01
APPROVED BY ZW	3/5/01

CONFIGURATION DETAILS OF UNDIMENSIONED FEATURES MAY VARY

COLOR VARIATIONS MAY OCCUR

L-COM Global Connectivity
45 BEECHWOOD DRIVE
NORTH ANDOVER, MA
01845

CATEGORY
AUDIO/VIDEO

PRODUCT DESCRIPTION
CA DVI-D M/DVI-D M W/FERR

SIZE	FSCM NO.	DWG. NO.	REV.
A	43321	CTLDVIMM	L

SCALE: NONE | CAD FILE: CTLDVIMM.SLDDRW | SHEET 1 OF 1