AC axial fans

A series, Ø 200



- **Material:** Guard grille: Steel, phosphated and coated in black plastic
  Wall ring: Sheet steel, pre-galvanised and coated in black plastic
  Blades: Sheet steel, coated in black
  Rotor: Coated in black
- **Number of blades:** 5
- **Direction of rotation:** Direction of air flow "V" counter-clockwise, direction of air flow "A" clockwise, seen on rotor
- **Type of protection:** IP 44
- **Insulation class:** "B"
- **Mounting position:** Shaft horizontal or rotor on bottom; rotor on top on request
- **Condensate discharges:** Rotor-side
- **Mode of operation:** Continuous operation (S1)
- **Bearings:** Maintenance-free ball bearings

Nominal data		Curve	Nominal voltage	Frequency	Air flow	Speed/rpm	Power input	Current draw	Capacitor	Sound pressure level	Max. operative range	Perm. amb. temp.	Mass without attachments	Electr. connection
Type	**Motor**		**VAC**	**Hz**	**m³/h**	**rpm**	**W**	**A**	**µF/VDB**	**dB(A)**	**Pa**	**°C**	**kg**	p. 416 f.
***2D 200** (1)	M2D 068-CF	Ⓐ	3~ 230/400 3~ 230/400	50 60	830 940	2800 3150	53 70	0.26/0.15 0.24/0.14	— —	67 70	140 140	-25 to +75 -25 to +75	1.7	C1)/C2)
***2E 200**	M2E 068-CA	Ⓑ	1~ 230 1~ 230	50 60	740 830	2740 3120	50 61	0.24 0.28	1.5/400 1.5/400	65 69	200 200	-25 to +75 -25 to +75	1.4	A1)
***4D 200** (1)	M4D 068-CF	Ⓒ	3~ 230/400 3~ 230/400	50 60	390 460	1450 1730	22 21	0.16/0.09 0.12/0.07	— —	51 55	70 100	-25 to +60 -25 to +80	1.5	C1)/C2)
***4S 200**	M4S 068-BF	Ⓓ	1~ 230 1~ 230	50 60	375 445	1380 1630	40 34	0.30 0.24	— —	52 53	60 80	-25 to +50 -25 to +65	1.2	B)

subject to alterations

(1) 230 VAC Δ / 400 VAC Y

Curves

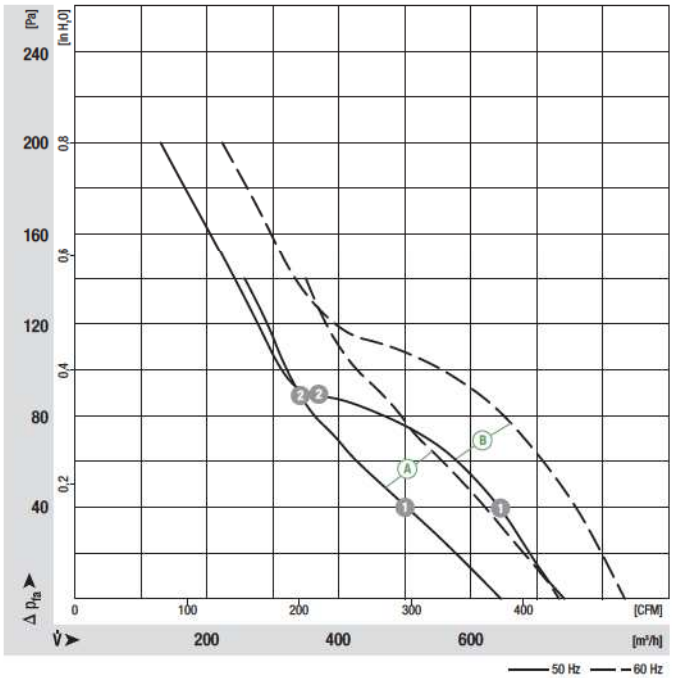

	n [rpm]	P_1 [W]	I [A]
Ⓐ ①	2785	53	0.15
Ⓐ ②	2770	55	0.15
Ⓑ ①	2670	51	0.24
Ⓑ ②	2670	50	0.24

ebmpapst

- **Motor protection:** Ⓐ Ⓒ Without TOP, Ⓑ Ⓓ TOP wired internally
- **Cable exit:** Ⓐ Ⓒ Ⓓ Lateral, Ⓑ variable
- **Protection class:** I
- **Product conforming to standards:** EN 60335-1, Ⓑ Ⓓ also CE
- **Approvals:** Ⓑ CCC

Direction of air flow



‹ "V"/"A" ›



‹ "V"/"A" ›



‹ "V"/"A" ›

	Without attachments	With full round nozzle	With guard grille for full nozzle
"V"	A2D 200-AA02 -01	W2D 200-CA02 -01	S2D 200-BA02 -01
"A"	A2D 200-AA02 -02	W2D 200-CA02 -02	S2D 200-BA02 -02
"V"	A2E 200-AF02 -01	W2E 200-CF02 -01	S2E 200-BF02 -01
"A"	A2E 200-AF02 -02	W2E 200-CF02 -02	S2E 200-BF02 -02
"V"	A4D 200-AA04 -01	W4D 200-CA04 -01	S4D 200-BA04 -01
"A"	A4D 200-AA04 -02	W4D 200-CA04 -02	S4D 200-BA04 -02
"V"	A4S 200-AA02 -01	W4S 200-CA02 -01	S4S 200-BA02 -01
"A"	A4S 200-AA02 -02	W4S 200-CA02 -02	S4S 200-BA02 -02

Curves

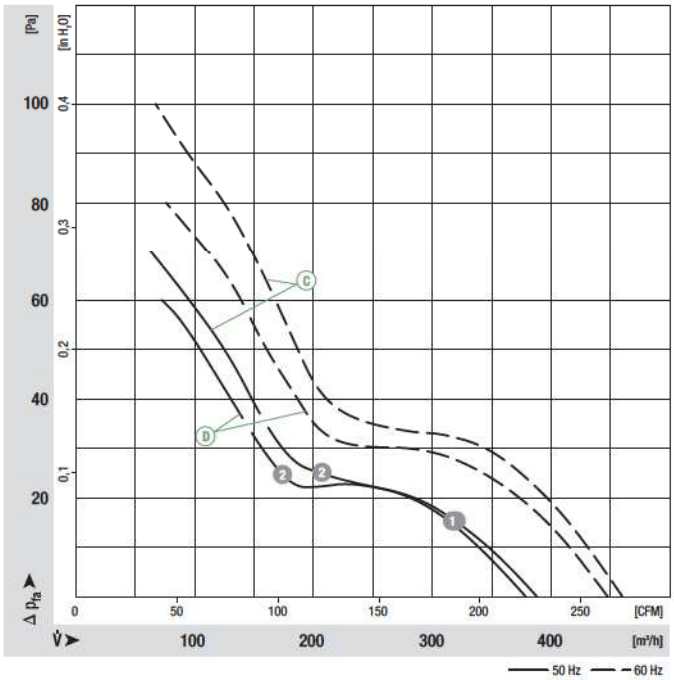

	n [rpm]	P_1 [W]	I [A]
Ⓒ ❶	1460	24	0.09
Ⓒ ❷	1460	24	0.09
Ⓓ ❶	1375	40	0.30
Ⓓ ❷	1380	39	0.29

AC axial fans

A series, Ø 200, drawings of directions of air flow "V" and "A"

Without attachments

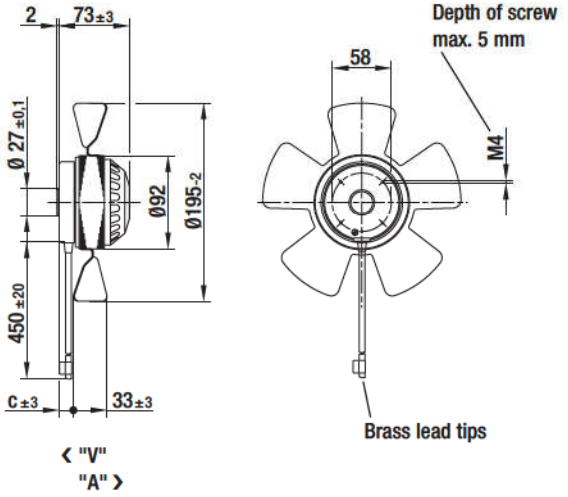

Type		c
A2D 200-AA02 -01	"V"	21.0
A2D 200-AA02 -02	"A"	21.0
A2E 200-AF02 -01	"V"	21.0
A2E 200-AF02 -02	"A"	21.0
A4D 200-AA04 -01	"V"	20.0
A4D 200-AA04 -02	"A"	20.0
A4S 200-AA02 -01	"V"	20.0
A4S 200-AA02 -02	"A"	20.0

With full round nozzle

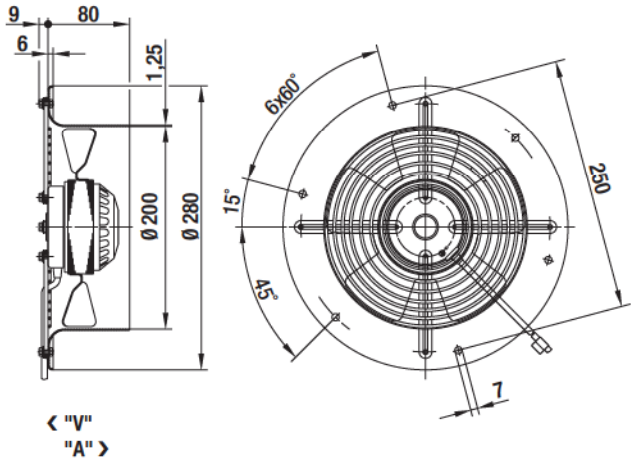

Type	
W2D 200-CA02 -01	"V"
W2D 200-CA02 -02	"A"
W2E 200-CF02 -01	"V"
W2E 200-CF02 -02	"A"
W4D 200-CA04 -01	"V"
W4D 200-CA04 -02	"A"
W4S 200-CA02 -01	"V"
W4S 200-CA02 -02	"A"

With guard grille for full nozzle

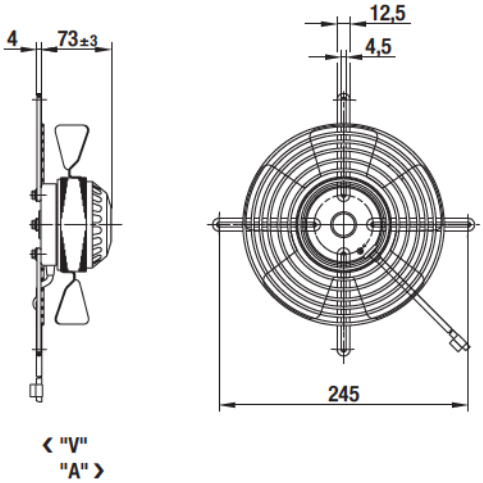

Type	
S2D 200-BA02 -01	"V"
S2D 200-BA02 -02	"A"
S2E 200-BF02 -01	"V"
S2E 200-BF02 -02	"A"
S4D 200-BA04 -01	"V"
S4D 200-BA04 -02	"A"
S4S 200-BA02 -01	"V"
S4S 200-BA02 -02	"A"