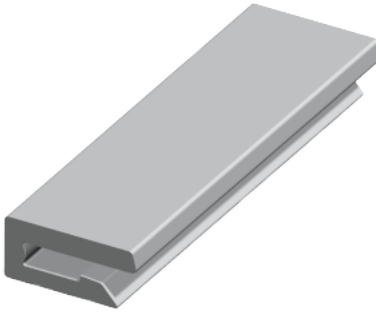

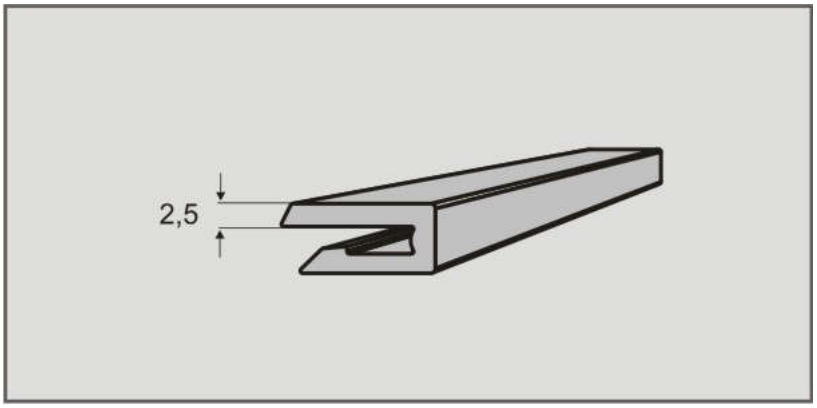

XBCR 25

Name	Slide rail
Description	XB
Product Group(s)	X85 , X180 , X180X , X300 , X300X , X70X , X85X
Configurable	No
Pack Size	1
Class	A
Weight	1.67
Unit	PCE
Length	25000
Catalogue	
Chain guide	
Spare parts	