PRODUCT DETAILS

ARTICLE: 16330FR

WEEL E 125X50/50 RB SWL FORK M22/50 +BR



Wheel series E

Wheels with elastic solid rubber tyre bonded to die-cast aluminum centre.
Available with ball bearings or roller bearings.
Wheel fitted with standard roller bearing.
Steel Hub.

Castor series M22

M22 series, Medium-light pressed steel fork assemblies; swivel version has double ball raceways. Zincplated.
Trailing foot brake - total stop.

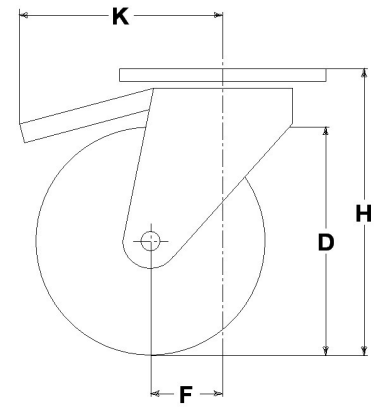

Technical data

Wheel diameter	D	125 mm
Tyre width	E	50,0 mm
Bore diameter	d	20 mm
Weight article		2,220 kg
Hub width	L	50 mm
Overall height	H	159 mm
Top plate outer dimensions	AxB	135x110 mm
Bolt hole spacing	axb	96x56 mm
Bolt hole spacing	axb	105x75 mm
Bolt hole spacing	axb	105x80 mm
Fixing bolt diameter	g	M10
Offset	F	49 mm
Fork width	U	50 mm
Load Capacity		200 kg

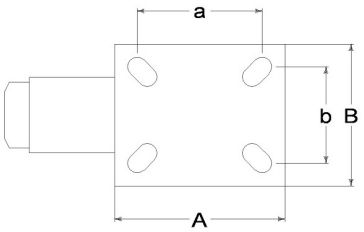

Related Articles

Spare part wheel: 2052
Basic version: 16330
Version with footguard: 16330PP
Version with trailing brake and footguard: 16330FRPP

GENERAL INFORMATION / RECOMMENDATIONS AND WARNINGS
The cited text and the complete catalogue in their most up-dated versions are available in the OEM's website page www.lagspa.it/downloads. The dimensions, descriptions, specifications and illustrations herein are indicative and subject to variations without notice. The fact that products are illustrated herein does not necessarily imply they are available from stock nor does it place us under any obligation to supply them.
Tests carried out refer to the original products with original accessories: the replacement of one of the components with others of different manufacture might prevent the same results from being achieved and will automatically invalidate any guarantee. Please contact our technical service concerning any special application.