# PN2093

PN-025-RER14-MFRKG/US/ /V

**Pressure sensors**

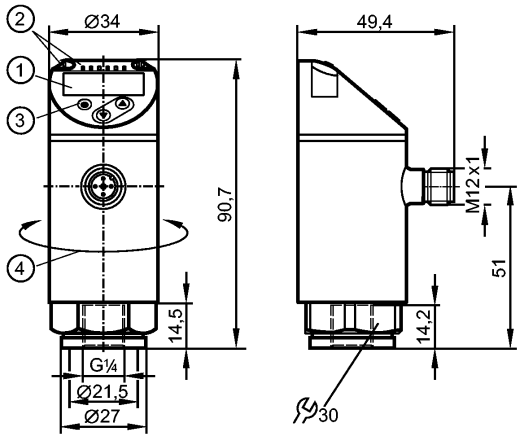


1: 4-digit alphanumeric display / alternating indication of red and green
2: LEDs (display unit / switching status)
3: Programming button
4: Upper part of the housing can be rotated by 345°

| | | | | |
|---|---|---|---|---|
| **Product characteristics** | | | | |
| Electronic pressure sensor | | | | |
| M12 connector | | | | |
| Function programmable | | | | |
| Measuring element: ceramic-capacitive pressure measuring cell | | | | |
| Process connection: G ¼ I (according to DIN EN ISO 1179-2) | | | | |
| 2 outputs<br>OUT1 = switching output<br>OUT2 = switching output or analogue output | | | | |
| 4-digit alphanumeric display / alternating indication of red and green | | | | |
| Measuring range: -1...25 bar / -14.5...362.5 psi / -0.1...2.5 MPa | | | | |
| **Application** | | | | |
| Application | | Type of pressure: relative pressure<br>Group 2 fluids according to the Pressure Equipment Directive (PED),<br>group 1 fluids on request | | |
| Pressure rating | | 150 bar | 2175 psi | 15 MPa |
| Bursting pressure min. | | 350 bar | 5075 psi | 35 MPa |
| Vacuum resistance | [mbar] | -1000 | | |
| Medium temperature | [°C] | -25...80 | | |
| **Electrical data** | | | | |
| Electrical design | | DC PNP/NPN | | |
| Operating voltage | [V] | 18...30 DC [1]) | | |
| Current consumption | [mA] | < 35 | | |
| Insulation resistance | [MΩ] | > 100 (500 V DC) | | |
| Protection class | | III | | |
| Reverse polarity protection | | yes | | |
| **Outputs** | | | | |
| Output | | 2 outputs<br>OUT1 = switching output<br>OUT2 = switching output or analogue output | | |

# PN2093

PN-025-RER14-MFRKG/US/ /V

**Pressure sensors**

| | | | |
|---|---|---|---|
| Output function | 2 x normally open / closed programmable or 1 x normally open / closed programmable + 1 x analogue (4...20 mA / 0...10 V; scaleable 1:5) | | |
| Current rating [mA] | 250 | | |
| Voltage drop [V] | < 2 | | |
| Short-circuit protection | pulsed | | |
| Overload protection | yes | | |
| Switching frequency [Hz] | ≤ 500 | | |
| Analogue output | 4...20 mA; 0...10 V | | |
| Max. load [Ω] | 4...20 mA: max. 500 | | |
| Min. load resistance [Ω] | 0...10 V: min. 2000 | | |
| **Measuring / setting range** | | | |
| Measuring range | -1...25 bar | -14.5...362.5 psi | -0.1...2.5 MPa |
| Setting range | | | |
| Set point, SP | -0.9...25 bar | -13...362.5 psi | -0.09...2.5 MPa |
| Reset point, rP | -0.95...24.95 bar | -13.5...362 psi | -0.095...2.495 MPa |
| Analogue start point, ASP | -1...20 bar | -14.5...290 psi | -0.1...2 MPa |
| Analogue end point, AEP | 4...25 bar | 58...362.5 psi | 0.4...2.5 MPa |
| in steps of | 0.05 bar | 0.5 psi | 0.005 MPa |
| **Accuracy / deviations** | | | |
| Accuracy / deviations (in % of the span) Turn down 1:1 | | | |
| Switch point accuracy | < ± 0.4 | | |
| Characteristics deviation *) | < ± 0.25 (BFSL) / < ± 0.5 (LS) | | |
| Hysteresis | < ± 0.1 | | |
| Repeatability **) | < ± 0.1 | | |
| Long-term stability ***) | < ± 0.05 | | |
| Temperature coefficients (TEMPCO) in the temperature range -25...80° C (in % of the span per 10 K) | | | |
| Greatest TEMPCO of the zero point | 0.2 | | |
| Greatest TEMPCO of the span | 0.2 | | |
| **Reaction times** | | | |
| Power-on delay time [s] | 0.3 | | |
| Min. response time switching output [ms] | < 1.5 | | |
| Delay time programmable dS, dr [s] | 0...50 | | |
| Damping for the switching output (dAP) [s] | 0...4 | | |
| Damping for the analogue output (dAA) [s] | 0...4 | | |
| Response time analogue output [ms] | < 3 | | |
| Integrated watchdog | yes | | |
| **Software / programming** | | | |
| Programming options | hysteresis / window function; NO / NC; on delay, off delay; damping; display unit; current/ voltage output | | |
| **Interfaces** | | | |
| IO-Link device | | | |
| Transfer type | COM2 | | |
| IO-Link revision | 1.1 | | |

# PN2093

PN-025-RER14-MFRKG/US/ /V

**Pressure sensors**

| | | |
|---|---|---|
| SDCI standard | | IEC 61131-9 |
| IO-Link device ID | | 462 d / 00 01 ce h |
| Profiles | | Smart Sensor: Process Data Variable; Device Identification, Device Diagnosis |
| SIO mode | | yes |
| Required master port class | | A |
| Process data analogue | | 1 |
| Process data binary | | 2 |
| Min. process cycle time | [ms] | 2.3 |

## Environment

| | | |
|---|---|---|
| Ambient temperature | [°C] | -25...80 |
| Storage temperature | [°C] | -40...100 |
| Protection | | IP 65 / IP 67 |

## Tests / approvals

| | | |
|---|---|---|
| Pressure equipment directive | | Sound engineering practice |
| EMC | | DIN EN 61000-6-2<br>DIN EN 61000-6-3 |
| Shock resistance | | DIN EN 60068-2-27 50 g (11 ms) |
| Vibration resistance | | DIN EN 60068-2-6 20 g (10...2000 Hz) |
| MTTF | [Years] | 138 |
| UL approval number | | J012 |

## Mechanical data

| | | |
|---|---|---|
| Process connection | | G ¼ I (according to DIN EN ISO 1179-2) |
| Materials (wetted parts) | | stainless steel (316L / 1.4404); Al2O3 (ceramics); FKM |
| Housing materials | | stainless steel (316L / 1.4404); PBT+PC-GF 30; PBT-GF 20; PC |
| Min. pressure cycles | | 100 million |
| Tightening torque | [Nm] | 25...35 (recommended tightening torque²) |
| Weight | [kg] | 0.222 |

## Displays / operating elements

| | |
|---|---|
| Display | Display unit 3 x LED green (bar, psi, MPa)<br>Switching status 2 x LED yellow<br>4-digit alphanumeric display / alternating indication<br>Measured values of red and green |

## Electrical connection

| | | |
|---|---|---|
| Connection | | M12 connector; Gold-plated contacts |

**Wiring**

Core colours

BK black
BN brown
BU blue
WH white




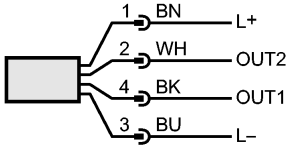


OUT1: switching output or IO-Link
OUT2: switching output or 4...20 mA / 0...10 V
Colours to DIN EN 60947-5-2

## Remarks

| | |
|---|---|
| Remarks | *) BFSL = Best Fit Straight Line / LS = Limit Value Setting |

| | |
|---|---|
| | **) with temperature fluctuations < 10 K<br>***) in% of the span / 6 months<br>[1]) to EN50178, SELV, PELV<br>[2]) Depends on lubrication, seal and pressure rating |
| Pack quantity [piece] | 1 |