INSTRUCTION MANUAL (ATEX / IECEx)
BExBG05D-P XENON BEACON
For use in Flammable Gas and Dust Atmospheres

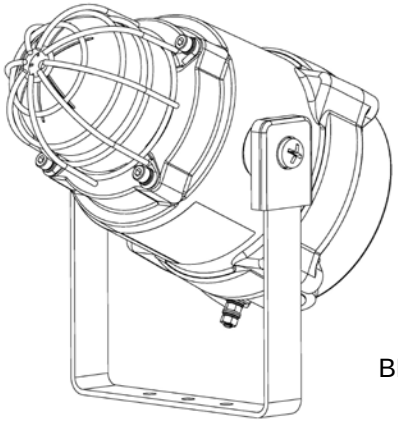

BExBG05D-P

1) Warnings



- DO NOT OPEN WHEN AN EXPLOSIVE ATMOSPHERE IS PRESENT
- DO NOT OPEN WHEN ENERGIZED
- POTENTIAL ELECTROSTATIC CHARGING HAZARD
- COVER BOLTS CLASS A4-80
- USE HEAT RESISTING CABLES AND CABLE GLANDS (RATED 110°C) AT AMB. TEMPERATURES OVER 40°C

2) Rating & Marking Information

All units have a rating label, which carries the following important information:-

Model No.: BExBG05D-P

Input Voltage: DC Units 12V or 24V or 48V
AC Units 115V or 230V

BExBG05D-P Codes:
Ex d IIC T5 Gb Ta. -50°C to +45°C
Ex d IIC T4 Gb Ta. -50°C to +70°C
Ex tb IIIC T90°C Db Ta. -50°C to +40°C
Ex tb IIIC T105°C Db Ta. -50°C to +55°C
Ex tb IIIC T120°C Db Ta. -50°C to +70°C

Certificate No. KEMA 00ATEX2006X
IECEx KEM 10.0002X

Epsilon x Equipment Group and Category: **II 2G**
II 2D

CE Marking Notified Body No. **0518**

The units can be installed in locations with the following conditions:

Area Classification Gas:

Zone 1	Explosive gas air mixture likely to occur in normal operation.
Zone 2	Explosive gas atmosphere not likely to occur in normal operation but may be present for short periods.

Gas Groupings:

Group IIA	Propane
Group IIB	Ethylene
Group IIC	Hydrogen and Acetylene

Temperature Classification:

T1	450ºC
T2	300ºC
T3	200ºC
T4	135ºC
T5	100ºC (Ambient +45ºC)

Area Classification Dust:

Zone 21	Explosive dust air mixture likely to occur in normal operation.
Zone 22	Explosive dust air mixture not likely to occur in normal operation, and if it does, it will only exist for a short time.

Dust Groupings:

Group IIIA	Combustible Dusts
Group IIIB	Non-Conductive Dust
Group IIIC	Conductive Dust

Maximum Surface Temperature for Dust Applications:
90ºC at +40 ºC ambient
105 ºC at +55 ºC ambient
120 ºC at +70 ºC ambient

IP Rating: IP66/67 to EN/IEC60529 and IP6X to EN/IEC60079-0, EN/IEC60079-31

Equipment Category: 2G / 2D

Equipment Protection Level: Gb / Db

Ambient Temperature Range:
-50°C to +70°C Gas Groups IIA, IIB and IIC
-50°C to +70°C Dust Groups IIIA, IIIB and IIIC

3) Type Approval Standards

The beacon carries an EC Type Examination Certificate and IECEx Certificate of Conformity, and have been certified to comply with the following standards:

EN60079-0:2012+A11:2013 / IEC60079-0:2011 (Ed 6): Explosive Atmospheres - Equipment. General requirements

EN60079-1:2007 / IEC60079-1:2007 (Ed 6): Explosive Atmospheres - Equipment protection by flameproof enclosures "d"

EN 60079-31:2014 / IEC60079-31:2013 (Ed 2): Explosive Atmospheres - Equipment dust ignition protection by enclosure "t"

4) Installation Requirements

The beacon must only be installed by suitably qualified personnel in accordance with the latest issues of the relevant standards:

EN60079-14 / IEC60079-14: Explosive atmospheres - Electrical installations design, selection and erection

EN60079-10-1 / IEC60079-10-1: Explosive atmospheres - Classification of areas. Explosive gas atmospheres

EN60079-10-2 / IEC60079-10-1: Explosive atmospheres - Classification of areas. Explosive dust atmospheres

The installation of the beacon must also be in accordance with any local codes that may apply and should only be carried out by a competent electrical engineer who has the necessary training.

5) Special Conditions of Use

Repair of the flamepath / flameproof joints is not permitted.

The enclosure is non-conducting and may generate an ignition-capable level of electrostatic charges under certain extreme conditions (such as high-pressure steam). The user should ensure that the equipment is not installed in a location where it may be subjected to external conditions that might cause a build-up of electrostatic charges on non-conducting surfaces.

Additionally, cleaning of the equipment should be done only with a damp cloth.

6) Location and Mounting

The location of the beacon should be made with due regard to the area over which the warning signal must be visible. They should only be fixed to services that can carry the weight of the unit.

The BEx beacon should be secured to any flat surface using the three 7mm fixing holes on the stainless steel U shaped mounting bracket. See Figure 1. The required angle can be achieved by loosening the two large bracket screws in the side of the unit, which allow adjustment of the beacon in steps of 18°. On completion of the installation then two large bracket adjustment screws on the side of the unit must be fully tightened to ensure that the unit cannot move in service.

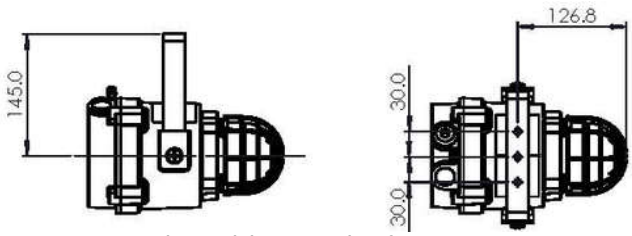

Fig. 1 Fixing Location for Beacon

7) Access to the Flameproof Enclosure


Warning – High voltage may be present, risk of electric shock. DO NOT open when energised, disconnect power before opening.


Warning – Hot surfaces. External surfaces and internal components may be hot after operation, take care when handling the equipment.

To access the Ex d chamber, remove the four M6 hexagon socket head screws and withdraw the flameproof cover taking extreme care not to damage the flameproof joints in the process. M6 cover screws are Class A4-80 stainless steel and only screws of this category can be used for the enclosure.

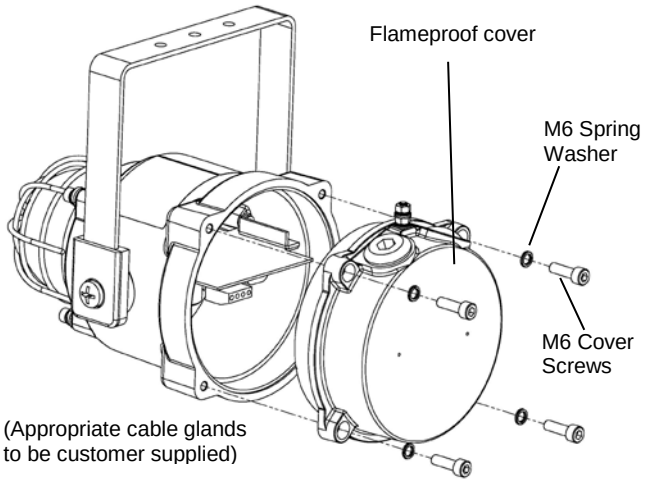

Fig. 2 Accessing the Explosion proof Enclosure.

On completion of the installation, the flameproof joints should be inspected to ensure that they are clean and that they have not been damaged during installation.

Check that the earth bonding wire between the two castings is secure and the 'O' ring seal is in place. When replacing the flameproof cover casting ensure that it is square with the flameproof chamber casting before inserting. Carefully push the cover in place allowing time for the air to be expelled. Only after the cover is fully in place should the four M6 Stainless Steel A4-80 cover bolts and their spring washer be inserted and tightened down. If the cover jams while it is being inserted, carefully remove it and try again. Never use the cover bolts to force the cover into position.

8) Power Supply Selection

It is important that a suitable power supply is used to run the equipment. The power supply selected must have the necessary capacity to provide the input current to all of the units.
The following table shows the input current taken by the various beacons and shows the maximum voltage at which the beacons can be operated:

Model No.	Nominal I/P Voltage	Input Current	Max. I/P Volts
BExBG05DPDC012	12Vdc	750mA	14V
BExBG05DPDC024	24Vdc	300mA	28V
BExBG05DPDC048	48Vdc	180mA	54V
BExBG05DPAC115	115Vac	140mA	126V
BExBG05DPAC230	230Vac	55mA	253V

The input current will vary according to the voltage input level. The current levels shown above are for nominal input voltage.

9) Selection of Cable. Cable Glands, Blanking Elements & Adapters

When selecting the cable size, consideration must be given to the input current that each unit draws (see table above), the number of beacons on the line and the length of the cable runs. The cable size selected must have the necessary capacity to provide the input current to all of the beacons connected to the line.

For ambient temperatures over +40ºC the cable entry temperature may exceed +70ºC and therefore suitable heat resisting cables and cable glands must be used, with a rated service temperature of at least 110ºC

The dual cable gland entries have an M20 x 1.5 entry thread. To maintain the ingress protection rating and mode of protection, the cable entries must be fitted with suitably rated ATEX / IECEx certified cable glands and/or suitably rated ATEX / IECEx certified blanking devices during installation according to EN / IEC60079-14.

If a high IP (Ingress Protection) rating is required then a suitable sealing washer must be fitted under the cable glands or blanking plugs.

For use in explosive dust atmospheres, a minimum ingress protection rating of IP6X must be maintained.

The BEx beacon range can be supplied with the following types of adapters:

M20 to ½" NPT
M20 to ¾" NPT
M20 to M25

It is important to note that stopping plugs cannot be fitted onto adapters, only directly onto the M20 entries.

Any other adapters used must be suitably rated and ATEX / IECEx certified adapters.

10) Earthing

Both AC and DC beacon units must be connected to an earth. The units are provided with internal and external earth terminals which are both located on the terminal chamber section of the unit.

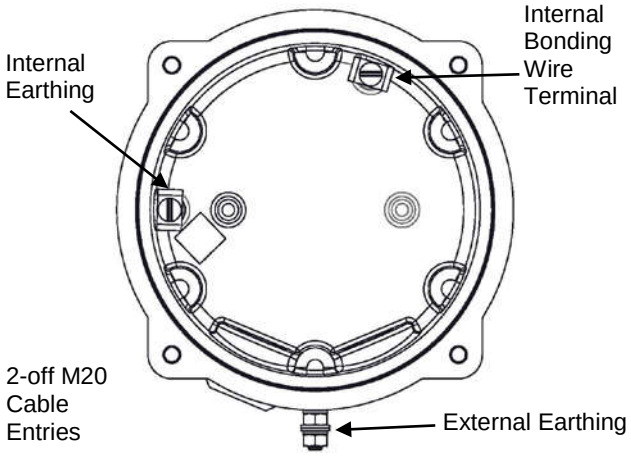

Fig. 3 Internal View of Cover

When using the internal earth terminal ensure that the stainless steel M4 flat washer is between the incoming earth wire and the enclosure.

Internal earthing connections should be made to the Internal Earth terminal in the base of the housing using a ring crimp terminal to secure the earth conductor under the earth clamp. The earth conductor should be at least equal in size and rating to the incoming power conductors.

External earthing connections should be made to the M5 earth stud, using a ring crimp terminal to secure the earth conductor to the earth stud. The external earth conductor should be at least 4mm² in size.

11) Cable Connections

Electrical connections are to be made into the terminal blocks on the PCBA located in the flameproof enclosure. See section 7 of this manual for access to the flameproof enclosure.

Wires having a cross sectional area between 0.5 mm² to 2.5mm² can be connected to each terminal way. If an input and output wire is required the 2-off Live/Neutral or +/- terminals can be used. If fitting 2-off wires to one terminal way the sum of the 2-off wires must be a maximum cross sectional area of 2.5mm². Strip wires to 8mm. Wires may also be fitted using ferrules. Terminal screws need to be tightened down with a tightening torque of 0.45 Nm / 5 Lb-in. When connecting wires to the terminals great care should be taken to dress the wires so that when the cover is inserted into the chamber the wires do not exert excess pressure on the terminal blocks. This is particularly important when using cables with large cross sectional areas such as 2.5mm².

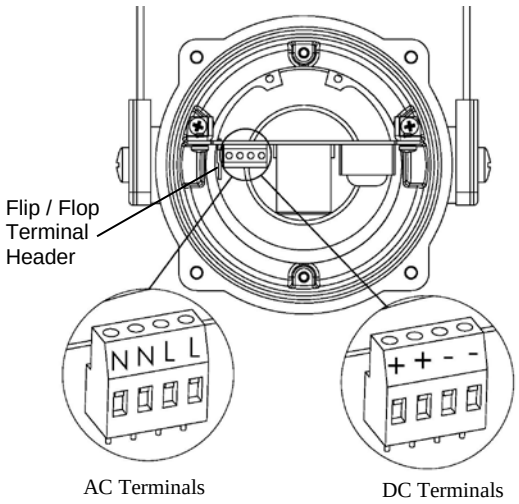

Fig. 4 Internal View of BExBGD 5 Joule Beacon

12) AC Wiring

A 4-way terminal block is provided on the AC beacon. There are 2-off Live and 2-off Neutral terminals in total.

12.1 Wiring Diagram

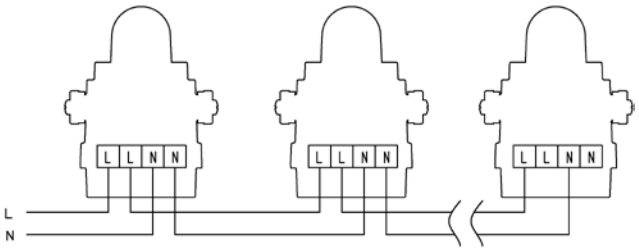

Fig. 5 AC Simplified Block Diagram

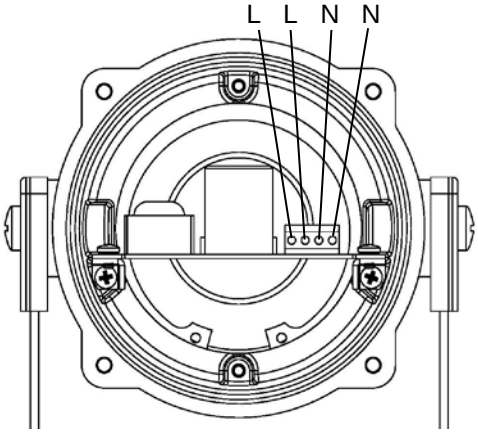

Fig. 6 AC Terminals

13) DC Wiring

A 4-way terminal block is provided on the AC beacon. There are 2-off +ve, 2-off –ve, 1-off stage 2 & stage 3 terminals in total.

13.1 Wiring Diagram

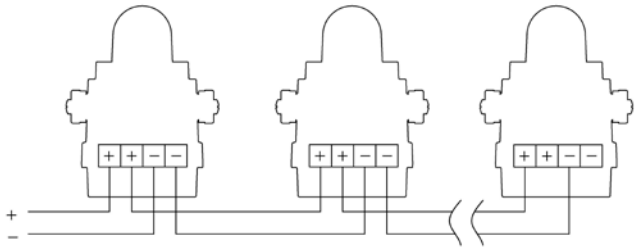

Fig. 7 DC Simplified Block Diagram (negative switching)

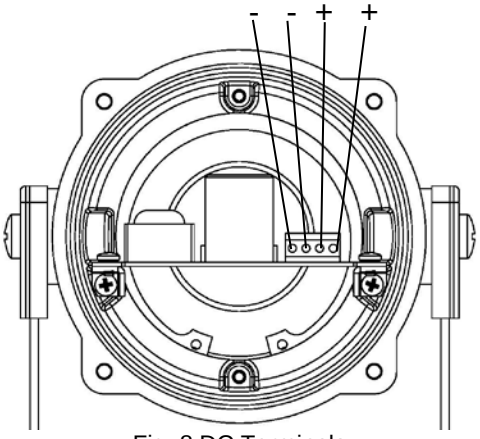

Fig. 8 DC Terminals

13.2 Line Monitoring

On BExBG05D-P DC units, dc reverse line monitoring can be used if required. All DC sounders have a blocking diode fitted in their supply input lines. An end of line monitoring diode or an end of line monitoring resistor can be connected across the +ve and –ve terminals. If an end of line resistor is used it must have a minimum resistance value of 3k3Ω and a minimum power rating of 0.5 watts or a minimum resistance value of 500Ω and a minimum power rating of 2 watts.

The resistor must be connected directly across the +ve and -ve terminals as shown in the following drawing. The resistor leads should be kept as short as possible.

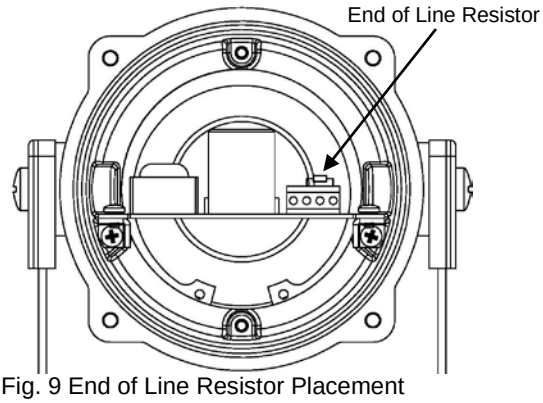

Fig. 9 End of Line Resistor Placement

14) Settings

14.1 Synchronised Operation

All BExBG05D-P beacons that are connected to the same supply line will have a synchronised flash rate at one flash every second. To ensure that the units will be synchronised check that the pin header is not fitted, i.e. the two header pins are not shorted together (see Figure 10).

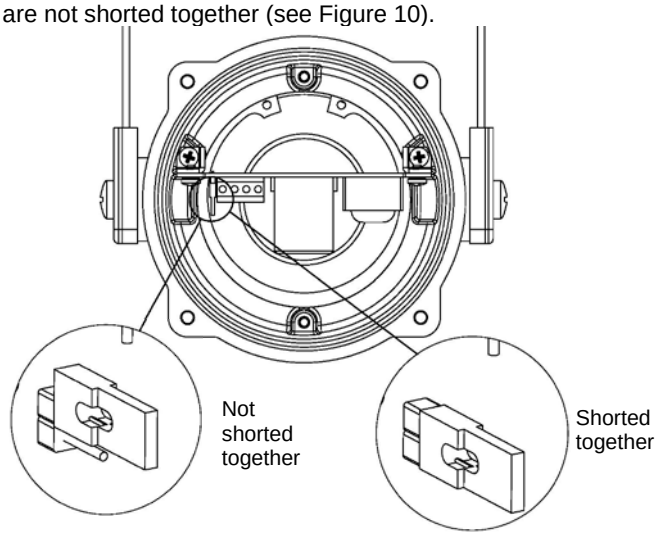

Fig. 10 Header Pin Settings

14.2 Flip-Flop Operation

Two beacons can be mounted close to each other to form a flip-flop operation, where the beacons will flash alternately. To achieve this mode of operation, fit a pin header to the flip-flop header pins on the electronics board, i.e. the two header pins are shorted together, (see figure 10) on one of the two beacons. The first flash on the beacon that has the header fitted will be delayed by ½ second. The two beacons will then flash alternately every ½ a second.

15) Interchangeable & Spare Parts



Warning – Hot surfaces. External surfaces and internal components may be hot after operation, take care when handling the equipment.

The beacon cover is interchangeable, contact E2S Ltd for a replacement cover available in various colours.

To change the cover, unscrew the M5 socket head screws and remove the M5 screws, M5 spring & flat washers.

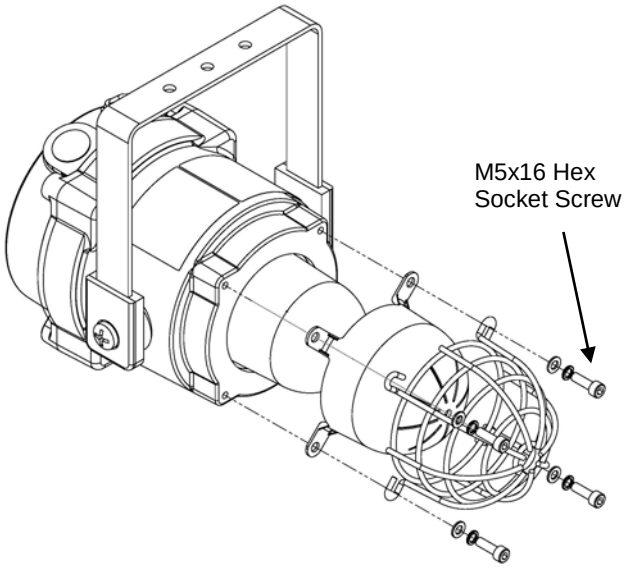

Fig. 11 Removal of cover

Remove the guard and replace the old cover with the new cover.

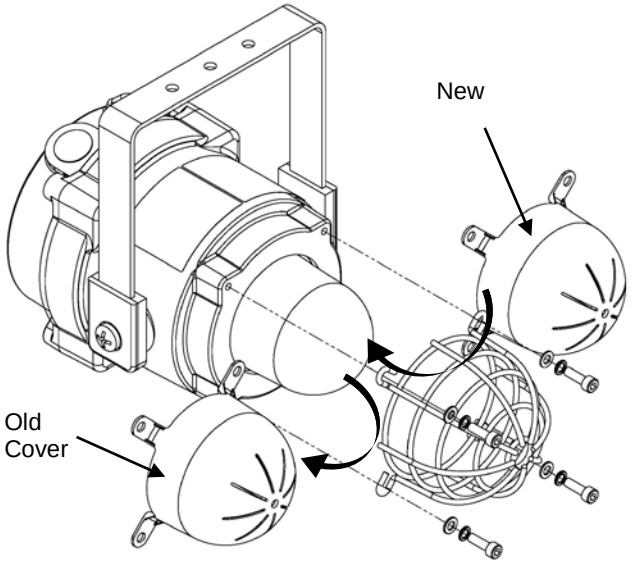

Fig. 12 Changing of cover

Fit the guard back on to the cover and casting, align the holes of the guard, cover and casting. To reattach the cover, the fixings MUST be in the order shown in figure 12.

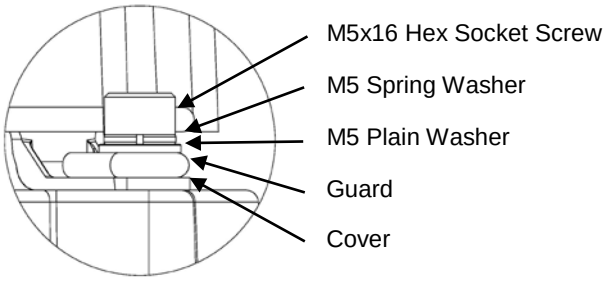

Fig. 13 Cover and Guard Fixtures

16) Maintenance, Overhaul & Repair

Maintenance, repair and overhaul of the equipment should only be carried out by suitably qualified personnel in accordance with the current relevant standards:

EN60079-19 IEC60079-19	Explosive atmospheres - Equipment repair, overhaul and reclamation
EN 60079-17 IEC60079-17	Explosive atmospheres - Electrical installations inspection and maintenance

To avoid a possible ELECTROSTACTIC CHARGE the unit must only be cleaned with a damp cloth.

Units must not be opened while an explosive atmosphere is present.

If opening the unit during maintenance operations a clean environment must be maintained and any dust layer removed prior to opening the unit.

Flameproof threaded joints and cemented joints are not intended to be repaired.