Inductive sensor

BES 516-325-E5-C-S4
BES00PK

BALLUFF
sensors worldwide

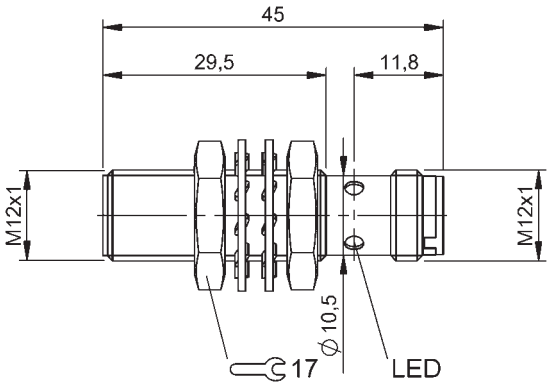

- **PNP**
- **Normally open (NO)**
- **2.00 mm**
- **Flush (shielded)**
- **Connector, M12x1-S04**

IND. CONT. EQ 81U2 for use in the secondary of a class 2 source of supply Environmental - Type 1 Enclosure

General attributes

Approvals / Conformity	cULus CE EAC
Basic standard	IEC 60947-5-2
Enclosure Type per IEC 60529	IP68 according to BWN PR 20
Function indicator	Yes
Polarity reversal protected	Yes
Power indicator	No
Protection Class	II
Short circuit protected	Yes
MTTF	640 a

Electrical attributes

Connection type	Connector
Eff. operating current Ie	200 mA
Eff. operating voltage Ue DC	24.0 V
Electrical version	DC, direct current
Load capacitance max. (at Ue)	0.500 µF
Max. no-load cur. Io undamped	2.5 mA
Minimum operating current Im	0 mA
No-load current Io damped max.	6.0 mA
Operating voltage UB max. DC [V]	30.0 V
Operating voltage UB min. DC [V]	10.0 V
Rated insulation voltage Ui	250 VAC
Rated short circuit current	100 A
Ripple max. (% of Ue)	15 %
Switching freq. f max. (at Ue)	5000 Hz

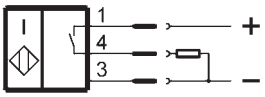

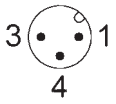

Switching function	Normally open (NO)
Switching output	PNP
Voltage drop static max.	2.5 V

Mechanical attributes

Ambient temperature Ta max.	70 °C
Ambient temperature Ta min.	-25 °C
Assured operating distance Sa	1.60 mm
Connector type	M12x1-S04
Depth	45.0 mm
Diameter d1	M12x1
Eff. operating distance Sr	2.00 mm
Housing material	CuZn
Mech. installation condition	Flush (shielded)
Mounting length	29.5 mm
Rated operating distance Sn [mm]	2.00 mm
Sensing face material	LCP
Surface protection	Nickel-free coating
Tightening torque	10 Nm

Remarks
The sensor is functional again after the overload has been eliminated.

For further information on MTTF/B10d, please refer to the MTTF / B10d Certificate.

Specification of the MTTF value and the B10d value do not represent any binding quality and/or life expectancy guarantees.

