E30429

DIN rail clip

DIN RAIL MOUNTING KIT

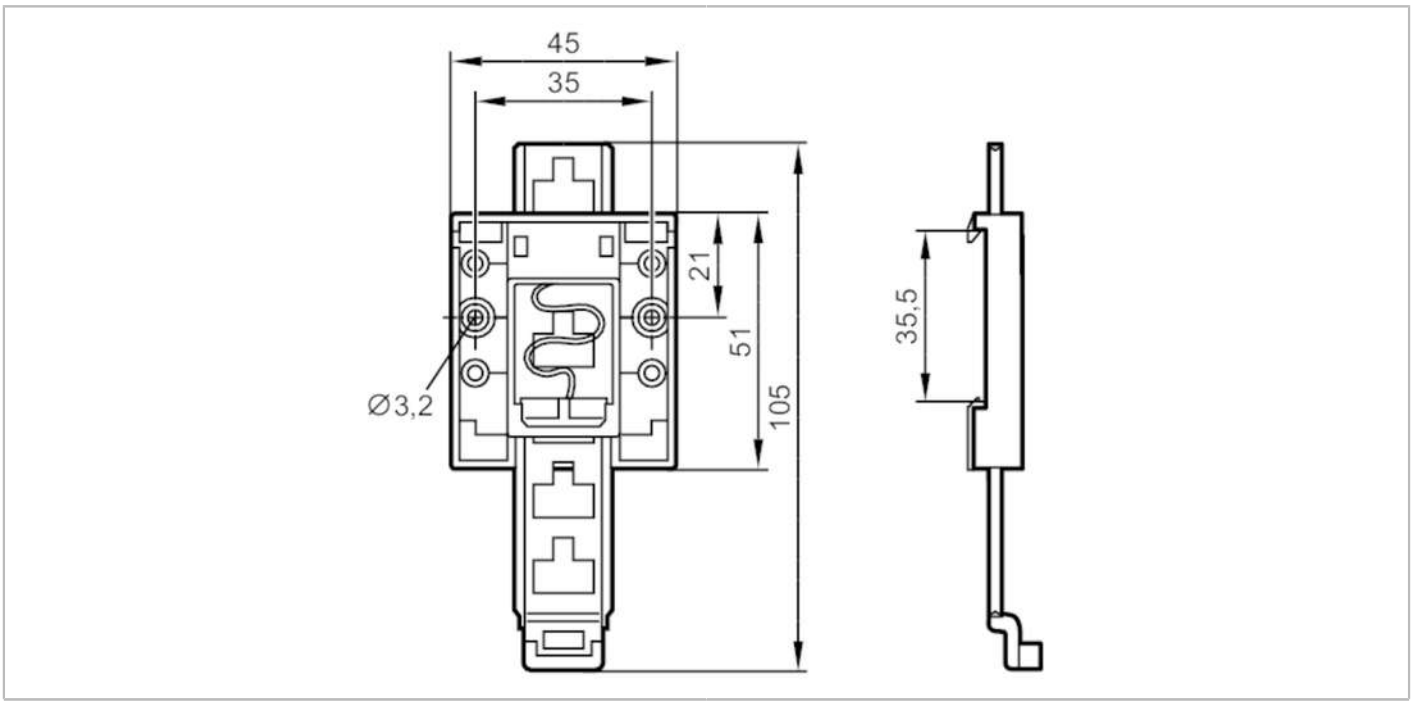

Application		
Design		for IO-Link display unit
Operating conditions		
Ambient temperature	[°C]	-25...80
Mechanical data		
Weight	[g]	16.6
Materials		PA; stainless steel (1.4567 / 304Cu)
Accessories		
Items supplied		Torx: 2 x T10 K30x15
Remarks		
Pack quantity		1 pcs.