SEE THE
WORLD WITH
NEW EYES

TEVISIO

ENGINEERS OF LIGHT

MAGNIFIER LUMINAIRE

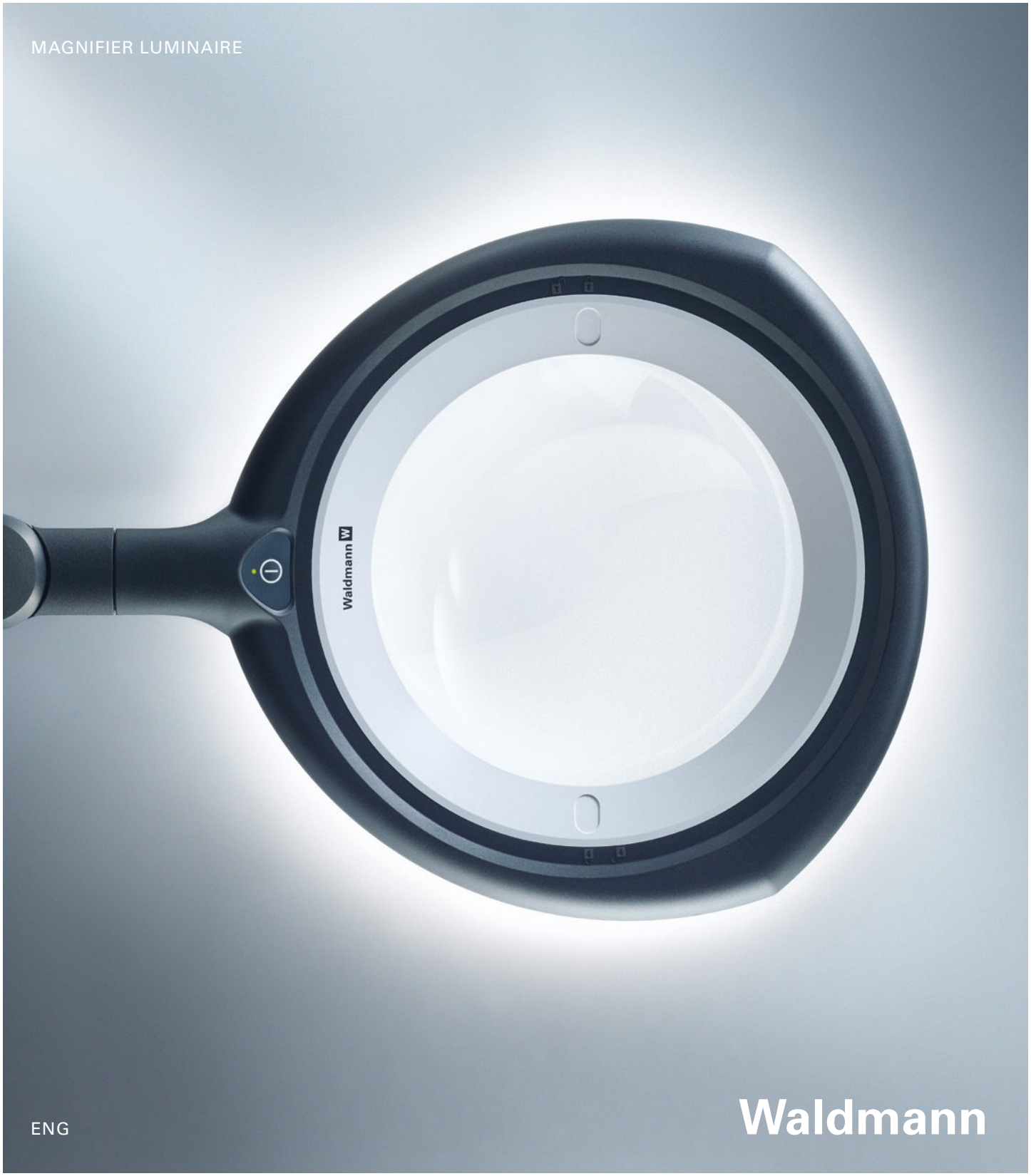

ENG

Waldmann





THE LIGHT OF PRODUCTIVITY.

Wherever you may be, and whatever you may produce.
Ever since 1928, Waldmann has been helping people to achieve cost targets, to standardise purchased parts and to eliminate quality problems. Do you wish to integrate components as simply as possible, electrically, in relation to systems technology, as well as mechanically? Do you insist on ultimate robustness, quality and technically correct use of components? Do your employees wish to have optimum conditions of visibility to enable them to work to a genuinely zero-defect and ergonomic standard?

Waldmann is the one stop solution. For a planet on which Swabian light never goes out.

TEVISIO. THE CHAMPION.



High light quality

Excellent colour rendering values and absolutely homogeneous light distribution.
Optimum support in the evaluation and verification of colour and surface qualities. Perfectly opacified cover, no adverse reflections.

Longevity

Perfect ergonomics and optimum sustainability.
Your stable arm, the sealed joints, the robust aluminium and the high-performance plastic used make TEVISIO a reliable partner for the longterm.

Lens changes

Simple to replace with 6 dpt. Plastic lens for a higher magnification factor.
Even greater ability to identify detail with the same perfect quality of depiction and a perfectly illuminated field of view – the new TEVISIO is now even more versatile.

As the Number 1 in terms of mobility and viewing quality, TEVISIO is indispensable wherever demands on viewing are highest. Now Waldmann is introducing a new generation of our best magnifying luminaire for the electronics, metal-working or watch-making sector. What endures is the innovative arm technology and the perfect lighting concept. New features include an enhanced level of colour rendering and even more homogeneous light distribution. Another completely revolutionary aspect is the tool-free removal of the lens for cleaning, replacement or exchange. The optional new 6 dpt. plastic lens makes it possible to achieve a higher magnification factor whenever you so desire. This enables you to see your world through new and now even better eyes.

NOW WITH EXCHANGE TECHNOLOGY.



The TEVISIO magnifier luminaire delivers delight right across the range. Either in terms of fast and problem-free lens changes, thanks to the flexible lens ring with bayonet connection, or the perfectly conceived technical lighting concept or the Visualizer function that suddenly also makes unseen errors visible. One thing always remains clear. The quality of this product stems from a love of detail. And with the new TEVISIO, cleaning, replacement or exchange suddenly become child's play.



TEVISIO. SEE THE WORLD WITH NEW EYES.



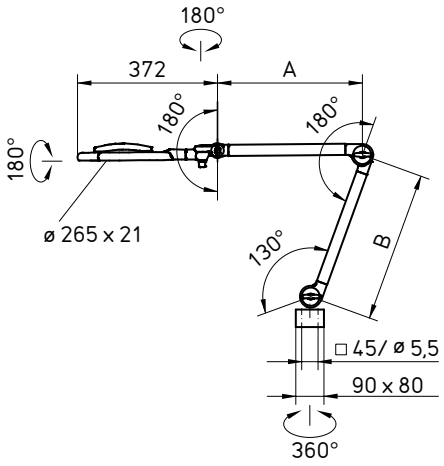

Lamp:	LED
Power consumption:	approx. 14 W
Connected load:	100 – 240 V; 50/60 Hz
Colour temperature:	neutral white 4000 K
Colour rendering:	Ra > 90; R9 > 70
Glare reduction:	satinised plastic screen
Magnification:	glass or plastic lens Ø 160 mm with 3.5 dpt. or 3.5 + 8 dpt. (integrated additional lens)
Operation:	film button in luminaire head for On / Off, dimming and visualizer function (segment switching)
Materials:	colourless anodised aluminium with black special-purpose plastic
Arm:	spring-relieved with 2D or 3D head joint
Degree of protection:	IP20
Protection class:	II
Connection:	delivery with approx. 3 m connection lead and mains power connector with connector type CEE 7/16 (Euro connector), BS1363 and NEMA 1-15/P
Accessories:	various fasteners, additional magnifier, 3.5 dpt. and 6 dpt. plastic lens

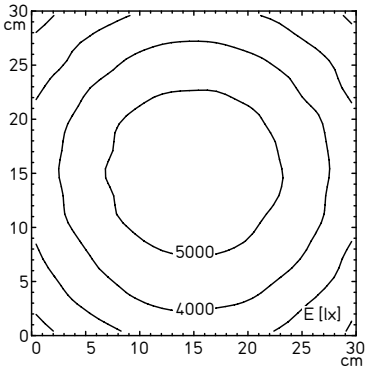

d = 15 cm,
E_{max} 5537 lx;
E_m 4099 lx

Dimensions	Special features	Order number
TVD 750/940 DM		
A = 484 mm, B = 500 mm	Glass lens, 3D head joint	113714000-00800676
A = 484 mm, B = 500 mm	non-reflective glass lens, 3D head joint	113714000-00800677
A = 484 mm, B = 500 mm	Glass lens, additional lens 8 dpt., 3D head joint	113714000-00800678
A = 384 mm, B = 400 mm	Glass lens, 3D head joint	113713000-00800659
A = 384 mm, B = 400 mm	non-reflective glass lens, 3D head joint	113713000-00800660
A = 384 mm, B = 400 mm	Glass lens, additional lens 8 dpt., 3D head joint	113713000-00800661
A = 384 mm, B = 400 mm	Plastic lens, 2D head joint	113712000-00800638
A = 384 mm, B = 400 mm	Plastic lens, additional lens 8 dpt., 2D head joint	113712000-00800639
Accessories		
Ø 160 mm	Plastic lens, 6 dpt.	190218019-00802994

#blackforestlight

Waldmann

Herbert Waldmann GmbH & Co. KG
Peter-Henlein-Straße 5
78056 Villingen-Schwenningen, Germany
www.waldmann.com



© H. Waldmann GmbH & Co. KG · TEVISIO / 1 · PDF / 08 / 2019 · Subject to modifications

ENG