

# NUP 213 ECP

Popular item
SKF Explorer

## Cylindrical roller bearings, single row

### Bearing data

Tolerances,
Normal (metric), P6, Normal (inch),
Radial internal clearance,
cylindrical bore, tapered bore,
Axial internal clearance,
NUP, NJ + HJ

### Bearing interfaces

Seat tolerances for standard conditions,
Tolerances and resultant fit

## Technical specification

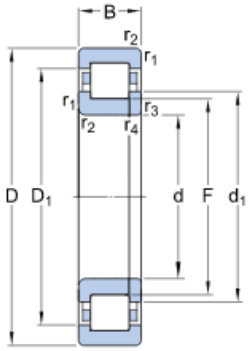


### DIMENSIONS

| | |
|---|---|
| d | 65 mm |
| D | 120 mm |
| B | 23 mm |
| $d_1$ | ≈ 84.4 mm |
| $D_1$ | ≈ 103.2 mm |
| F | 78.5 mm |
| $r_{1,2}$ | min. 1.5 mm |
| $r_{3,4}$ | min. 1.5 mm |

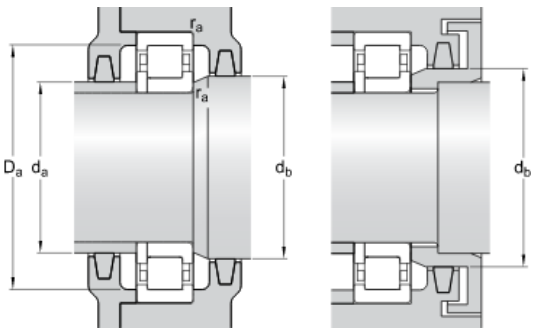


### ABUTMENT DIMENSIONS

| | |
|---|---|
| $d_a$ | min. 76 mm |
| $d_b$ | min. 87 mm |
| $D_a$ | max. 110.6 mm |
| $r_a$ | max. 1.5 mm |

## CALCULATION DATA

| | | |
|---|---|---|
| Basic dynamic load rating | C | 122 kN |
| Basic static load rating | $C_0$ | 118 kN |
| Fatigue load limit | $P_u$ | 15.6 kN |
| Reference speed | | 6300 r/min |
| Limiting speed | | 6700 r/min |
| Calculation factor | $k_r$ | 0.15 |
| Limiting value | e | 0.2 |
| Axial load factor | Y | 0.6 |

## MASS

| | |
|---|---|
| Mass bearing | 1.06 kg |

## More information

### Product details

- Designs and variants
- Bearing data
- Loads
- Temperature limits
- Permissible speed
- Design considerations
- Designation system

### Engineering information

- Principles of rolling bearing selection
- General bearing knowledge
- Bearing selection process
- Bearing failure and how to prevent it

### Tools

- SimPro Quick
- Bearing Select
- Engineering Calculator
- LubeSelect for SKF greases
- Heater selection tool
- Oil Injection Method Program
- Rolling bearings mounting and dismounting instructions

# Terms and conditions

By accessing and using this website / app of SKF Group, meaning AB SKF and / or any of its affiliates ("SKF"), you agree to the following terms and conditions:

Warranty Disclaimer and Limitation of Liability

Although every care has been taken to assure the accuracy of the information on this website / app, SKF provides this information "AS IS" and DISCLAIMS ALL WARRANTIES, EXPRESS OR IMPLIED, INCLUDING, BUT NOT LIMITED TO, IMPLIED WARRANTIES OF MERCHANTABILITY AND FITNESS FOR A PARTICULAR PURPOSE. You acknowledge that your use of this website / app is at your sole risk, that you assume full responsibility for all costs associated with use of this website / app, and that SKF shall not be liable for any direct, incidental, consequential, or indirect damages of any kind arising out of your access to, or use of the information or software made available on this website / app. Any warranties and representations in this website / app for SKF products or services that you purchase or use will be subject to the agreed upon terms and conditions in the contract for such product or service. Further, for non-SKF websites / apps that are referenced in our website / app or where a hyperlink appears, SKF makes no warranties concerning the accuracy or reliability of the information in these websites / apps and assumes no responsibility for material created or published by third parties contained therein. In addition, SKF does not warrant that this website / app or these other linked websites / apps are free from viruses or other harmful elements.

Copyright

Copyright in this website / app copyright of the information and software made available on this website / app rest with SKF or its licensors. All rights are reserved. All licensed material will reference the licensor that has granted SKF the right to use the material. The information and software made available on this website / app may not be reproduced, duplicated, copied, transferred, distributed, stored, modified, downloaded or otherwise exploited for any commercial use without the prior written approval of SKF. However, it may be reproduced, stored and downloaded for use by individuals without prior written approval of SKF. Under no circumstances may this information or software be supplied to third parties.

This website /app includes certain images used under license from Shutterstock, Inc.

Trademarks and Patents

All trademarks, brand names, and corporate logos displayed on the website / app are the property of SKF or its licensors, and may not be used in any way without prior written approval by SKF. All licensed trademarks published on this website / app reference the licensor that has granted SKF the right to use the trademark. Access to this website / app does not grant to the user any license under any patents owned by or licensed to SKF.

Changes

SKF reserves the right to make changes or additions to this website / app at any time.