6305-2Z

SKF Explorer

Dimensions

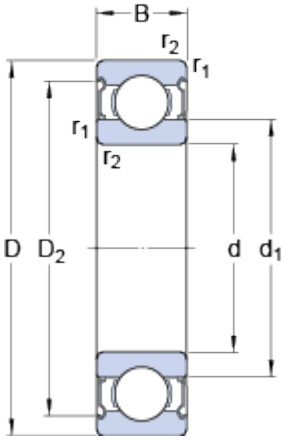

d		25	mm
D		62	mm
B		17	mm
d_1		36.6	mm
D_2		52.7	mm
$r_{1,2}$	min.	1.1	mm

Abutment dimensions

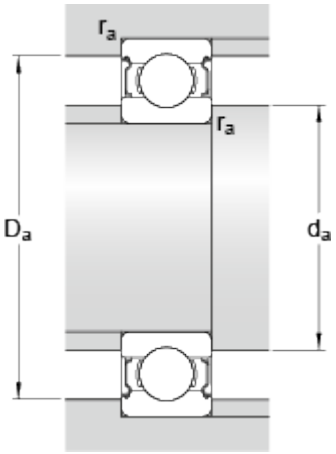

d_a	min.	32	mm
d_a	max.	36.5	mm
D_a	max.	55	mm
r_a	max.	1	mm

Calculation data

Basic dynamic load rating	C	23.4	kN
Basic static load rating	C_0	11.6	kN
Fatigue load limit	P_u	0.49	kN
Reference speed		24000	r/min
Limiting speed		13000	r/min
Calculation factor	k_r	0.03	
Calculation factor	f_0	12	

Mass

Mass bearing	0.234	kg