OJ5191

Retro-reflective sensor for the detection of transparent objects

OJPGFPKG/SO/0,15M/US

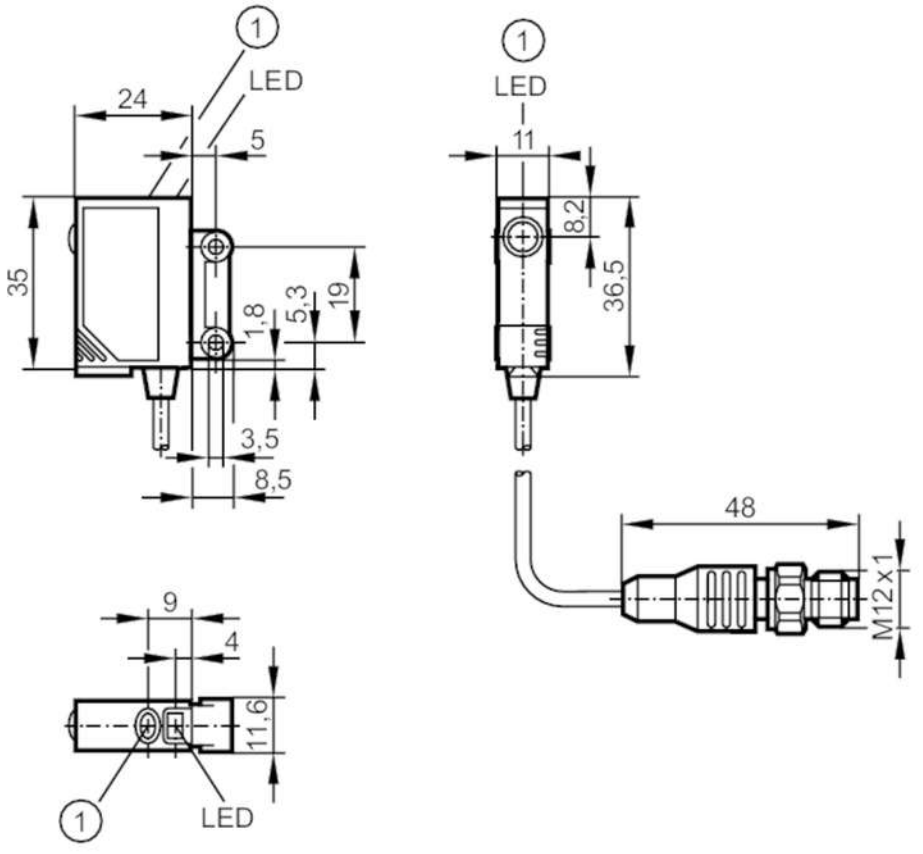

1 pushbutton

Product characteristics		
Type of light		red light
Housing		rectangular
Application		
Special feature		polarisation filter
Function principle		Retro-reflective sensor
Electrical data		
Operating voltage	[V]	10...30 DC
Current consumption	[mA]	< 22
Protection class		III
Reverse polarity protection		yes
Type of light		red light
Wave length	[nm]	660
Outputs		
Electrical design		PNP
Output function		light-on/dark-on mode; (programmable)
Max. voltage drop switching output DC	[V]	2.5

OJ5191

Retro-reflective sensor for the detection of transparent objects

OJPGFPKG/SO/0,15M/US

Permanent current rating of switching output DC	[mA]	200	
Switching frequency DC	[Hz]	2000	
Short-circuit protection		yes	
Type of short-circuit protection		pulsed	
Overload protection		yes	
Detection zone			
Range referred to prismatic reflector	[m]	0.2...1.5; (Prismatic reflector 50 x 50 mm E20722)	
Range adjustable		yes	
Max. light spot diameter	[mm]	64	
Light spot dimensions refer to		at maximum range	
Polarisation filter available		yes	
Operating conditions			
Ambient temperature	[°C]	0...60	
Protection		IP 67	
Tests / approvals			
EMC		EN 60947-5-2	
MTTF	[years]	854	
Mechanical data			
Weight	[g]	40.8	
Housing		rectangular	
Dimensions	[mm]	35 x 11 x 24	
Materials		housing: ABS; LED window: SEPS; pushbutton: SEPS	
Lens material		glass	
Lens alignment		side lens	
Displays / operating elements			
Display		switching status	1 x LED, yellow
		operation	1 x LED, green
		function	1 x LED, red
Accessories			
Items supplied		screws: 2	
		spring washers: 2	
		Nuts: 2	
Remarks			
Remarks		operating voltage "supply class 2" according to cULus	
Pack quantity		1 pcs.	

OJ5191

Retro-reflective sensor for the detection of transparent objects

OJPGFPKG/SO/0,15M/US

Electrical connection

Cable: 0.15 m, PVC

Connector: 1 x M12; coding: A



Connection

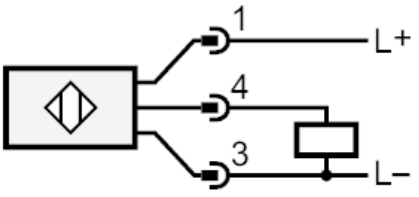

OJ5191

Retro-reflective sensor for the detection of transparent objects

OJPGFPKG/SO/0,15M/US

Diagrams and graphs

excess gain graph

