Product data sheet
Characteristics

FSG2
pressure switch FSG 4.6 bar - adjustable scale 2 thresholds - 2NC



Main

Range of product	OsiSense XM
Pressure sensor type	Electromechanical pressure sensor
Pressure sensor name	FSG
Pressure sensor size	4.6 bar
Fluid connection type	G 1/4 (female) conforming to ISO 228
Controlled fluid	Fresh water (0...70 °C) Sea water (0...70 °C)
Cable entry	2 cable entries with grommet
Contacts type and composition	2 NC snap action
Product specific application	-
Pressure switch type of operation	Regulation between 2 thresholds
[In] rated current	10 A at 250 V AC conforming to EN 60730-1
Electrical connection	Screw-clamp terminals, clamping capacity: 1 x 1...2 x 2 mm²
Short-circuit protection	20 A cartridge fuse type gG
Scale type	Adjustable differential
Setting	Internal
Local display	Without
Electrical circuit type	Power circuit

Complementary

Materials in contact with fluid	Nitrile Nylon 6/6 Zinc plated steel
Enclosure material	PS
Operating position	Any position
Motor power kW	0.75 kW/1 hp at 110 V AC, 1 phase 1.1 kW/1.5 hp at 110 V AC, 3 phases 1.5 kW/2 hp at 230 V AC, 1 phase 1.5 kW/2 hp at 400 V AC, 1 phase

Disclaimer: This documentation is not intended as a substitute for and is not to be used for determining suitability or reliability of these products for specific user applications

	2.2 kW/3 hp at 230 V AC, 3 phases 2.2 kW/3 hp at 400 V AC, 3 phases
Adjustable range of switching point on falling pressure	0.3...3.4 bar
Adjustable range of switching point on rising pressure	1.4...4.6 bar
Possible differential minimum at low setting	1 bar
Possible differential minimum at high setting	1.2 bar
Possible differential maximum at low setting	2.1 bar
Possible differential maximum at high setting	2.3 bar
Maximum permissible accidental pressure	8 bar
Maximum permissible pressure - per cycle	5.75 bar
Destruction pressure	20 bar
Pressure actuator	Diaphragm
Electrical durability	100000 cycles at 10 cyc/mn
Mechanical durability	1000000 cycles
Terminal block type	4 terminals
Possible differential minimum at middle setting	1.1 bar
Possible differential maximum at middle setting	2.2 bar
Operating rate	10 cyc/mn
[Ui] rated insulation voltage	500 V conforming to EN/IEC 60947-1
[Uimp] rated impulse withstand voltage	6 kV conforming to EN/IEC 60947-1
Product weight	0.34 kg
Repeat accuracy	< 2 %
Terminals description ISO n°1	(1-2)NC (3-4)NC
Depth	102 mm
Height	96 mm
Width	72 mm

Environment

Standards	CE EN/IEC 60730
Ambient air temperature for operation	0...45 °C
Ambient air temperature for storage	-30...80 °C
Protective treatment	TC
Electrical shock protection class	Class I conforming to IEC 536
IP degree of protection	IP20 conforming to EN/IEC 60529

Offer Sustainability

Sustainable offer status	Green Premium product
RoHS (date code: YYWW)	Compliant - since 0627 - Schneider Electric declaration of conformity Schneider Electric declaration of conformity
REACh	Reference contains SVHC above the threshold - Go to CaP for more details Go to CaP for more details
Product environmental profile	Available Product environmental
Product end of life instructions	Available

	End of life manual

Contractual warranty

Warranty period	18 months

Dimensions

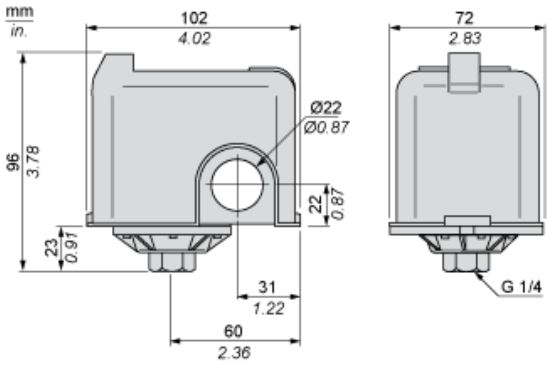
mm
in.
102
4.02
72
2.83
Ø22
Ø0.87
96
3.78
22
0.87
23
0.91
31
1.22
60
2.36
G 1/4

Wiring Diagram

Connections

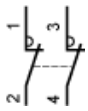

Curves

Operating Curves

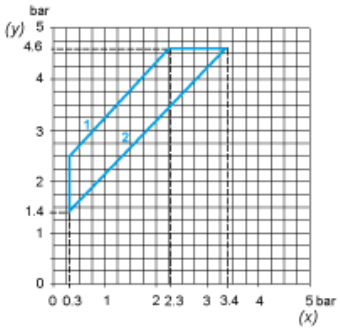

(y) Rising pressure
(x) Falling pressure
1 : Maximum differential
2 : Minimum differential

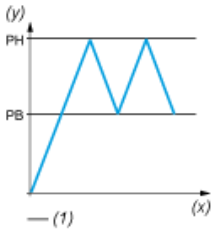

(y) Pressure
(x) Time
(1) Adjustable value