# E12224

## Wirable valve connector

SVDAA031PLSFKPG

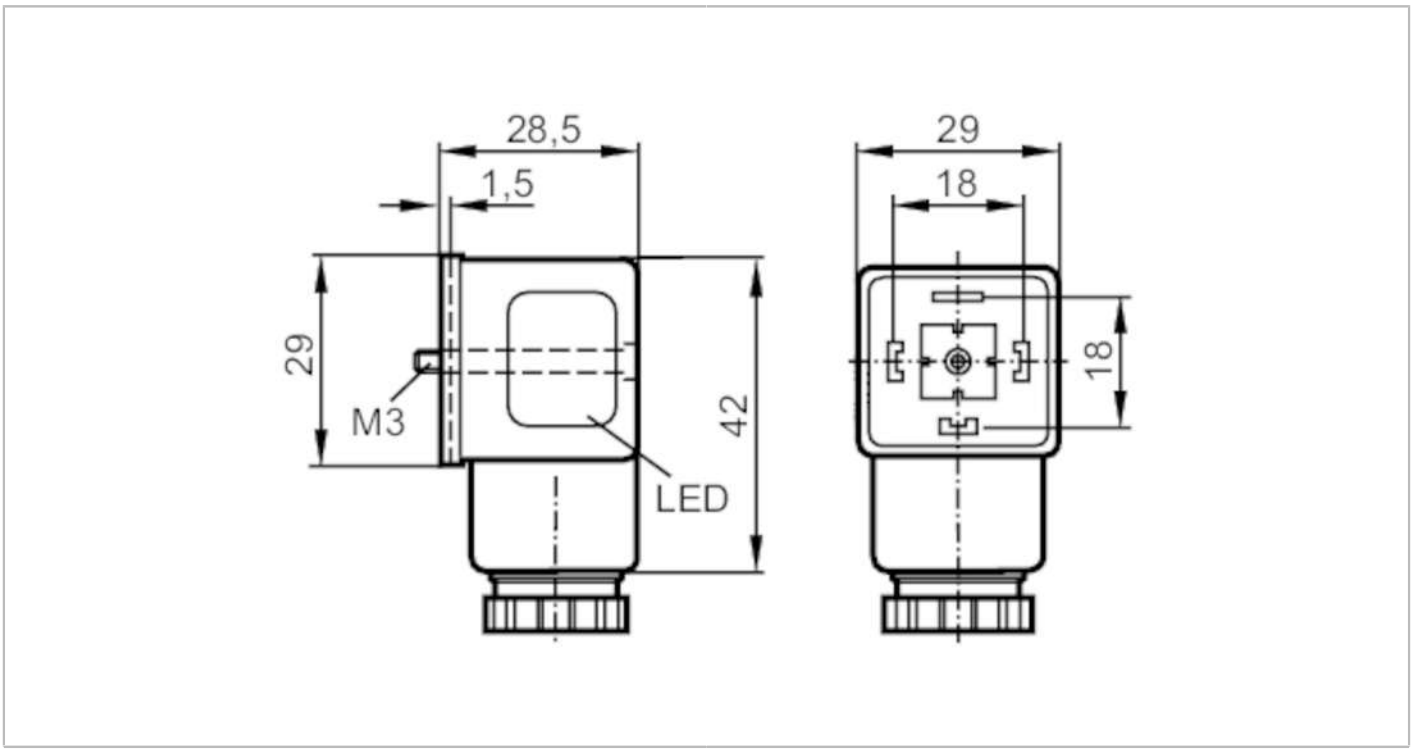


| | | |
|---|---|---|
| **Application** | | |
| Special feature | | Free from silicone |
| Free from silicone | | yes |
| **Electrical data** | | |
| Operating voltage | [V] | < 24 DC |
| Max. current load total | [A] | 16 |
| **Operating conditions** | | |
| Ambient temperature | [°C] | -40...125 |
| Protection | | IP 65 |
| **Mechanical data** | | |
| Weight | [g] | 29.4 |
| Materials | | housing: PA transparent; end cap: PA black; Sealing: NBR black |
| **Remarks** | | |
| Pack quantity | | 1 pcs. |

# E12224

## Wirable valve connector

**SVDAA031PLSFKPG**

### Electrical connection

terminals: 4 x ...1.5 mm²; Cable sheath: Ø 6...8 mm

### Electrical connection - socket

Connector: 1 x valve type A DIN, angled




### Connection

