Control panel installation kit

R412010406

Mechanical accessories

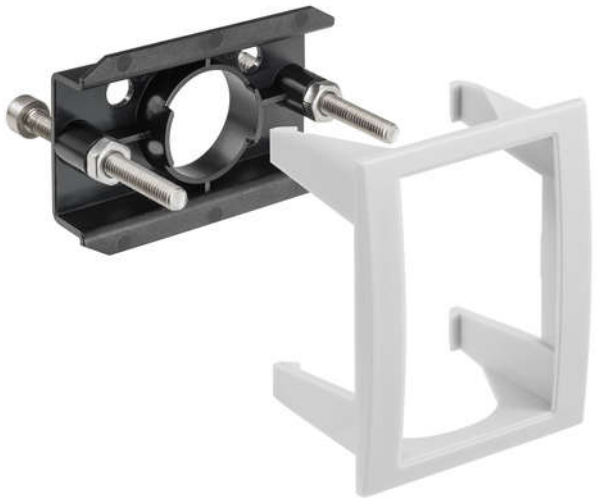

Technical data

Industry	Industrial
For series	PE5
Min. ambient temperature	0 °C
Max. ambient temperature	60 °C
Delivery unit	1 piece

Material

Seal material	Polyurethane
Part No.	R412010406

Control panel installation kit

R412010406

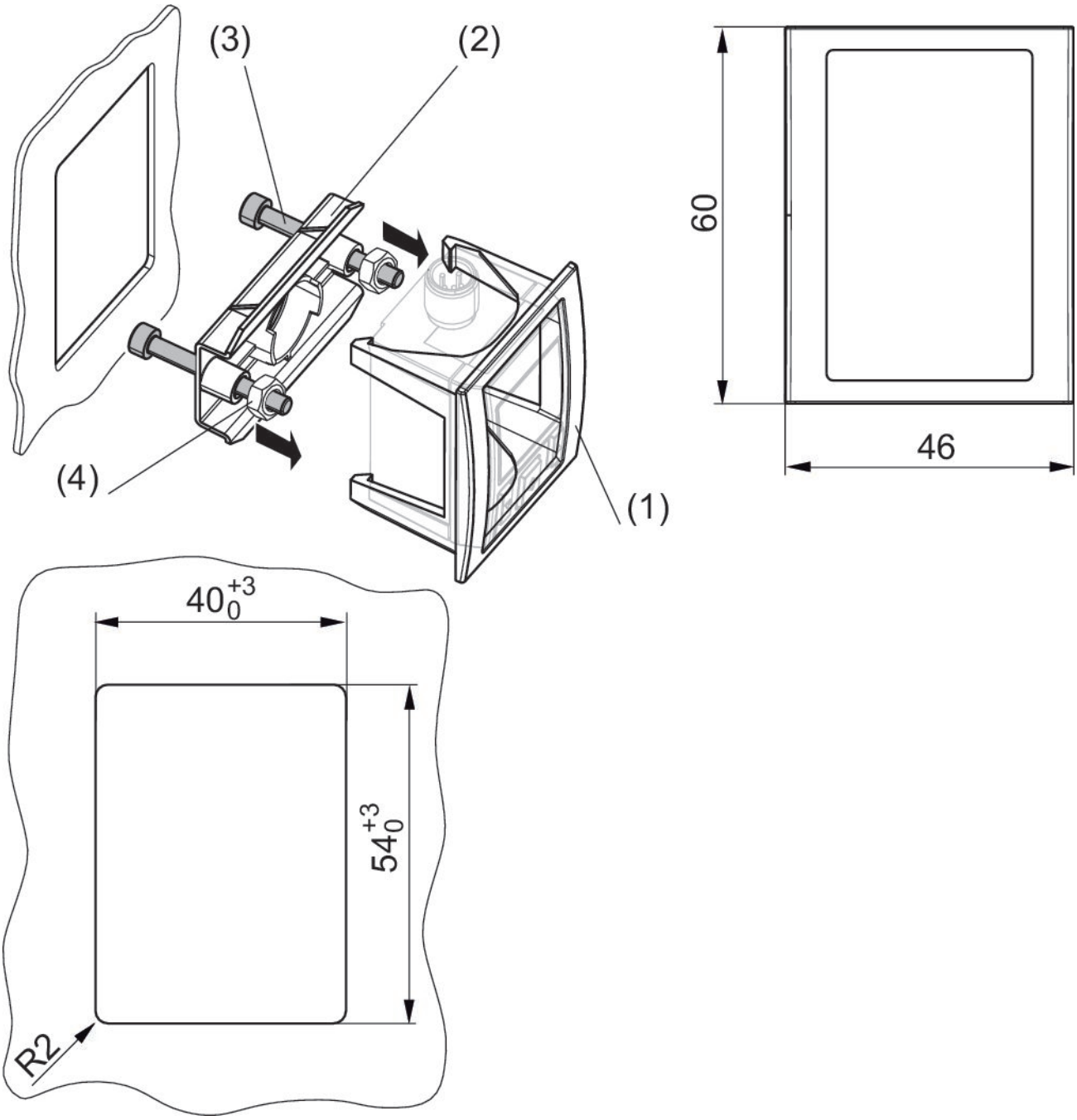

1 front frame (1), 1 wall mounting (2), 2 attachment screws M4x40 (3), 2 hexagonal nuts (4)
Panel plate thickness max. 5.0 mm