MURR ELEKTRONIK
stay connected

Mico Pro PS 10-100-240/24

IN: 90- 265VAC OUT: 24-28V/10ADC

INPUT: 90...265 V AC
OUTPUT: 24...28 V DC
Current: 10 A
Build your own Mico Pro® online:
START

Min. mains failure bridging
min. 44 ms (115 V AC); min. 44 ms (230 V AC)

Link to Product

Illustration



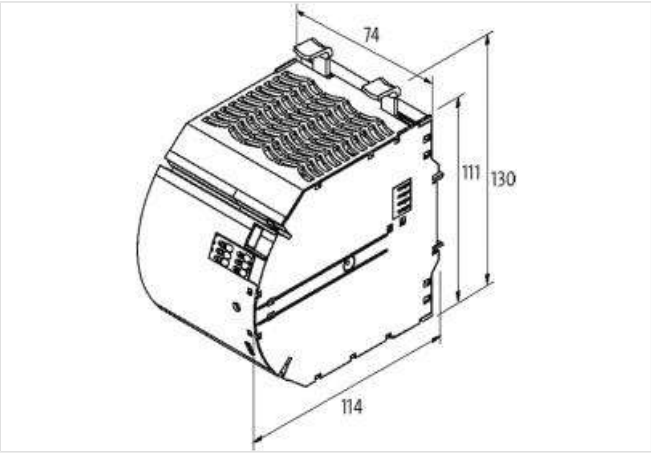

Product may differ from Image

Commercial data

ECLASS-6.0	27141901
ECLASS-6.1	27049002
ECLASS-7.0	27049002
ECLASS-8.0	27049002
ECLASS-9.0	27040701
ECLASS-10.1	27040701
ECLASS-11.1	27040701
ECLASS-12.0	27040701
ETIM-5.0	EC001440
customs tariff number	85044083
GTIN	4048879695817
Packaging unit	1

Electrical data

Number of devices parallel connection max.	2
Parallel connection	yes
Series connection	no

The information in this Product-PDF has been compiled with the utmost care.
Liability for the correctness completeness and topicality of the information is restricted to gross negligence. Version: 2023-11-02

MURR ELEKTRONIK
stay connected

Security level	SELV
Electrical data | Supply	
Power frequency	50 ... 60 Hz
Electrical data | Input	
Fuse protection primary side internal	6,3 A
CTRL input voltage control inputs high min.	9 V
CTRL input voltage control inputs high max.	30 V
CTRL signal	ON/OFF
Characteristic back-up fuse	Inertia
Input voltage 1 AC	115 V
Input voltage 2 AC	230 V
Input voltage AC min.	90 V
Input voltage AC max.	265 V
Current input at input voltage 1	3,7 A
Current input at input voltage 2	1,7 A
Inrush current max.	25 A
ON input voltage control inputs min.	9 V
ON input voltage control inputs max.	30 V
ON pulse length control inputs high min.	120 ms
Efficiency	91,8 % @ 115 V AC, 93,6 % @230 V AC
Electrical data | Output	
Output voltage DC	24 V
Output voltage DC min.	24 V
Output voltage DC max.	28 V
Output voltage adjustable	yes
Output current	10 A
Ripple effective max.	20 mV
Switching voltage AC max.	30 V
Switching voltage DC max.	30 V
Spikes (s-s) max.	380 mV
Installation | Connection	
Connection	Push-In spring clamp terminals
Device protection | Electrical	
Short-circuit protection output	yes
Degree of protection (EN IEC 60529)	IP20
Overload protection output	yes
Overtemperature protection output	yes
Mechanical data | Mounting data	
Mounting method	geschnappt
Suitable for mounting type	Mounting rail TH35, (EN 60715)
Height	130 mm
Width	74 mm
Depth	114 mm
Environmental characteristics | Climatic	
Operating temperature min.	-25 °C
Operating temperature max.	55 °C
Storage temperature min.	-40 °C
Storage temperature max.	85 °C
Relative humidity min. (operation)	5 %
Relative humidity max. (operation)	95 % no condensation
Conformities, approvals, certificates	

The information in this Product-PDF has been compiled with the utmost care.
Liability for the correctness completeness and topicality of the information is restricted to gross negligence. Version: 2023-11-02

Product standard	IEC 61010-2-201
EMC	EN 61000-3-2

The information in this Product-PDF has been compiled with the utmost care.
Liability for the correctness completeness and topicality of the information is restricted to gross negligence. Version: 2023-11-02