SM6004

Magnetic-inductive flow meter

SMR12GGX50KG/US-100

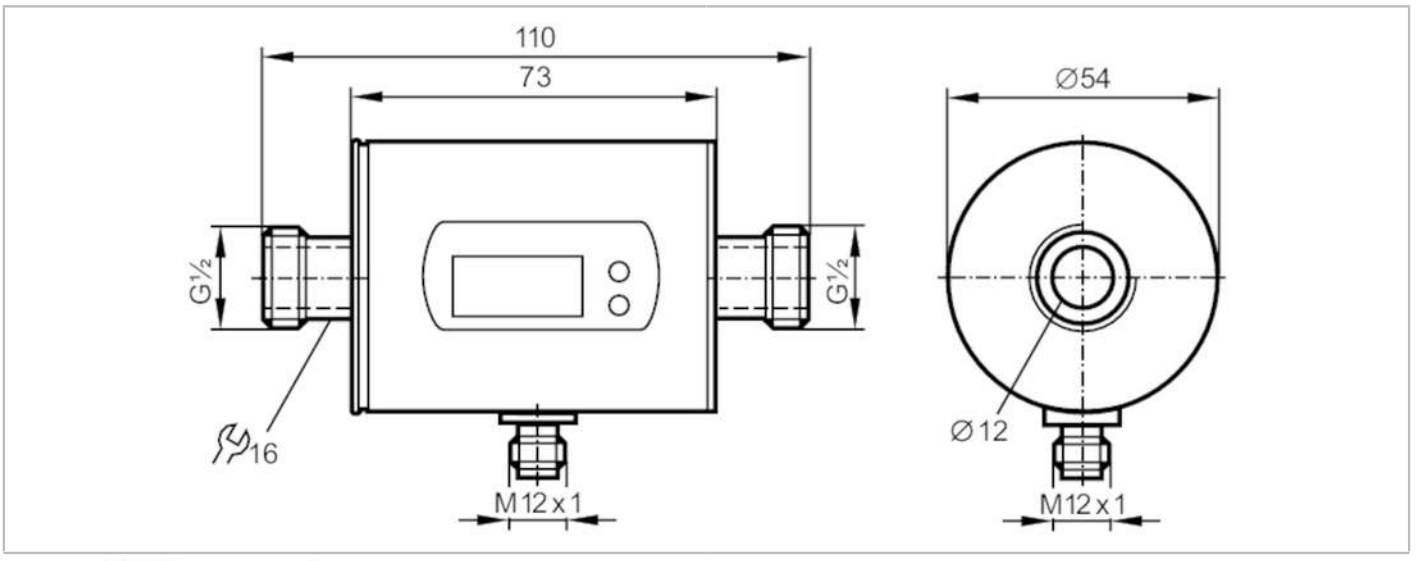

CE PA CRN cULus LISTED EC 1935/2004 UKCA

Product characteristics			
Number of inputs and outputs		Number of analogue outputs: 2	
Measuring range		0.1...25 l/min	0.03...6.6 gpm
Process connection		threaded connection G 1/2 DN15 flat seal	
Application			
Special feature		Gold-plated contacts	
Application		for industrial applications	
Installation		connection to pipe by means of an adapter	
Media		conductive liquids; water; hydrous media	
Note on media		conductivity: ≥ 20 µS/cm	
		viscosity: < 70 mm²/s (40 °C)	
Medium temperature	[°C]	-10...70	
Pressure rating	[bar]	16	
Pressure rating	[Mpa]	1.6	
MAWP (for applications according to CRN)	[bar]	17.7	
Electrical data			
Operating voltage	[V]	20...30 DC; (to SELV/PELV)	
Current consumption	[mA]	120; (24 V)	
Protection class		III	
Reverse polarity protection		yes	
Power-on delay time	[s]	5	
Inputs / outputs			
Number of inputs and outputs		Number of analogue outputs: 2	
Outputs			
Total number of outputs		2	
Output signal		analogue signal	
Number of analogue outputs		2	

SM6004

Magnetic-inductive flow meter

SMR12GGX50KG/US-100

Analogue current output	[mA]	4...20; (scalable)	
Max. load	[Ω]	500	
Overload protection		yes	
Measuring/setting range			
Measuring range		0.1...25 l/min	0.03...6.6 gpm
Display range		-30...30 l/min	-7.92...7.92 gpm
Resolution		0.02 l/min	0.01 gpm
Analogue start point ASP		0...20 l/min	0...5.28 gpm
Analogue end point AEP		5...25 l/min	1.32...6.6 gpm
In steps of		0.02 l/min	0.01 gpm
Temperature monitoring			
Measuring range	[°C]	-20...80	
Resolution	[°C]	0.2	
Analogue start point	[°C]	-20...60	
Analogue end point	[°C]	0...80	
In steps of	[°C]	0.2	
Accuracy / deviations			
Flow monitoring			
Accuracy (in the measuring range)		± (2 % MW + 0,5 % MEW)	
Repeatability		± 0,2% MEW	
Temperature monitoring			
Accuracy	[K]	± 2,5 (Q > 1 l/min)	
Response times			
Flow monitoring			
Response time	[s]	0.15; (dAP = 0, T19)	
Damping process value dAP	[s]	0...3	
Temperature monitoring			
Dynamic response T05 / T09	[s]	T09 = 20 (Q > 1 l/min)	
Operating conditions			
Ambient temperature	[°C]	-10...60	
Storage temperature	[°C]	-25...80	
Protection		IP 67	
Tests / approvals			
EMC		DIN EN 60947-5-9	500 V withstand voltage (V DC)
CPA approval		model number	008MI
		accuracy class	-
		maximum allowable error	± 2,5 % FS
		Q (min)	0,005 m³/h
		Q (t)	-
		Q (max)	1,5 m³/h
Shock resistance		DIN IEC 68-2-27	20 g (11 ms)
Vibration resistance		DIN IEC 68-2-6	5 g (10...2000 Hz)
MTTF	[years]	175	
Pressure Equipment Directive		Sound engineering practice; can be used for group 2 fluids; group 1 fluids on request	

SM6004

Magnetic-inductive flow meter

SMR12GGX50KG/US-100

Mechanical data		
Weight [g]	481.5	
Materials	stainless steel (1.4404 / 316L); PBT-GF20; PC; FKM; TPE	
Materials (wetted parts)	stainless steel (1.4404 / 316L); PEEK; FKM	
Process connection	threaded connection G 1/2 DN15 flat seal	

Displays / operating elements		
Display	Display unit	6 x LED, green (l/min, m³/h, gpm, gph, °C, °F)
	measured values	alphanumeric display, 4-digit
	programming	alphanumeric display, 4-digit
Display unit	l/min; m³/h; gpm; gph; °C; °F	

Remarks	
Remarks	MW = measured value
	MEW = Final value of the measuring range
Pack quantity	1 pcs.

Electrical connection

Connector: 1 x M12; coding: A; Contacts: gold-plated



Connection

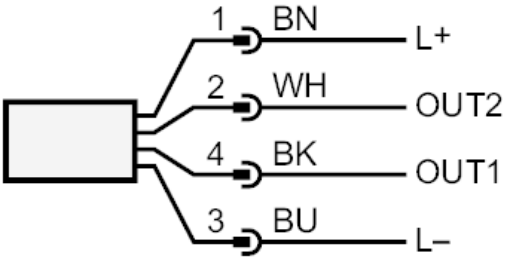

	colours to DIN EN 60947-5-2
OUT1:	analogue output Temperature monitoring
OUT2:	analogue output volumetric flow quantity monitoring
	Core colours :
BK =	black
BN =	brown
BU =	blue
WH =	white

SM6004

Magnetic-inductive flow meter

SMR12GGX50KG/US-100

Diagrams and graphs

Pressure loss

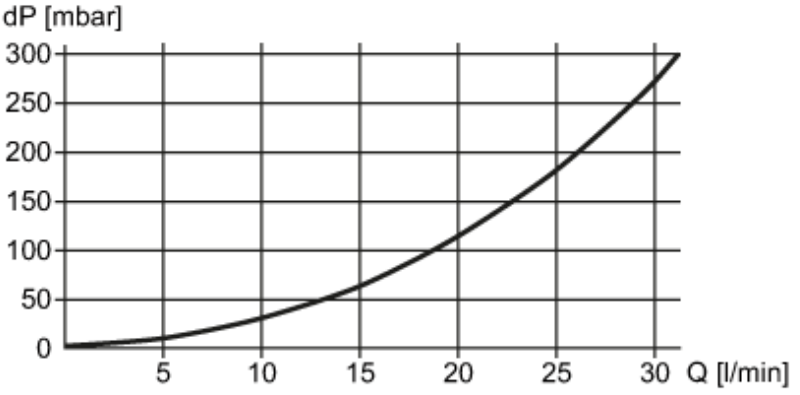

dP Pressure loss

Q volumetric flow quantity