

SIRCO PV UL 98B

Load break switches for photovoltaic applications
from 100 to 2000 A, up to 1000 VDC





Function

SIRCO PV UL 98B are manually operated multipolar load break switches. They make and break under load conditions and provide safety isolation for any PV circuit up to 1000 VDC (as per UL 98B standard). They comply with NEC Atr. 690 (US National Electrical Code) concerning photovoltaic installations. They are compliant for use within solar inverters and enclosures governed by standard UL1741.

SIRCO PV are extremely durable switches that have been tested and approved for use in the most demanding environments.

They have been designed and tested for all types of applications: connected to earth, floating or bipolar.

Advantages

Performance

A glass fibre reinforced polyester break chamber with an arc extinguishing system provides a patented safety disconnection system offering rapid extinguishing of the electric arc up to 1000 VDC and current interruption up to 2000 A.

Back-to-back double load break switch

The system of back-to-back double switches enables:

- on load operation of two switches with a single handle,
- compact solution when connecting two separate photovoltaic circuits compared with the use of two separate switches,
- easy connection,
- voltages above 1000 VDC are broken by the use of two poles in series.

The solution for

- Combiner box
- Recombiner box
- Inverter



Strong points

- Patented switching technology
- Positive break indication
- Up to 1000 VDC as per characteristics by UL 98B
- Suitable for use in accordance with NEC Art. 690

Conformity to standards

- UL 98B Guide WHVA, file E346418
- CSA C22.2#4, Class 4651-02, file 112964
- NEC Art 690 Issue 2011
- IEC 60947-3

Approvals and certifications(1)

(1) Product reference on request.

socomec Innovative Power Solutions

References

1000 VDC - Back plate mounting

Rating (A)	Frame size	No. of poles	Switch body	External handle	Shaft for external handle
1 PV circuit					
100 A	B4	2 P	27PV **2009**	S2 type Black 1, 3R, 12 142F **2111**(1) Red/Yellow 1, 3R, 12 142G **2111**(1) Black 4, 4X 142D **2111**(1) Red/Yellow 4, 4X 142E **2111**(1)	200 mm 7.9 inches 1400 **1020** 320 mm 12.6 inches 1400 **1032** 400 mm 15.7 inches 1400 **1040**(2)
200 A	B4		27PV **2019**		
250 A	B4		27PV **2024**		
600 A	B6	4 P	27PV **4060**	S3 type Black 4, 4X 143D **3111**(1) Red/Yellow 4, 4X 143E **3111**(1)	200 mm 7.9 inches 1401 **1520** 320 mm 12.6 inches 1401 **1532** 400 mm 15.7 inches 1401 **1540**(2)
800 A	B7		27DC **4081**	S4 type Black 4, 4X 144D **3111**(1) Red/Yellow 4, 4X 144E **3111**(1)	
1200 A	B7		27DC **4121**		
2000 A	$B7_{DS}$	8 P	27DC **4201**	V1 type Black 3R, 12 2799 **7145**	320 mm 12.6 inches 4199 **3018**
2 PV circuits					
100 A	$B4_{DS}$	4 P	27PV **5009**	S2 type Black 1, 3R, 12 142F **2111**(1) Red/Yellow 1, 3R, 12 142G **2111**(1) Black 4, 4X 142D **2111**(1) Red/Yellow 4, 4X 142E **2111**(1)	200 mm 7.9 inches 1400 **1020** 320 mm 12.6 inches 1400 **1032** 400 mm 15.7 inches 1400 **1040**(2)
250 A	$B4_{DS}$		27PV **5024**		
600 A	$B6_{DS}$	8 P	27PV **8060**	V1 type Black 3R, 12 2799 **7145**	320 mm 12.6 inches 4199 **3018**
800 A	$B7_{DS}$		27DC **8081**		
1000 A	$B7_{DS}$		27DC **8101**		

(1) Defeatable handle.
(2) Shaft guide reference 1429 0000 is required for shaft length over 15.7 inches (400mm).

Accessories

External operation

Use

In a combiner box, located close to the solar cell strings, or located close to the inverter, we recommend to use a door interlocked external handle for its safety features.

Door interlocked external operation handles include an escutcheon, are padlockable and must be utilized with an extension shaft.

Example

The locking function of the enclosure in the "ON" position will force the operator to safely disconnect and isolate the solar cell strings prior to any intervention. Opening the door when the switch is on "ON" position is possible by defeating the locking function using a tool (authorized persons only). The interlocking function is restored when the door is re-closed.



S2 type handle



Reinforced S2 type handle(1)

(1) Please consult us.

Frame size	Handle type	Handle colour	Nema degree of protection	Reference
B4 $B4_{DS}$	S2	Black	1, 3R, 12	142F **2111**
		Red/Yellow		142G **2111**
		Black	4, 4X	142D **2111**
		Red/Yellow		142E **2111**
B6	S3	Black		143D **3111**
		Red/Yellow		143E **3111**
B7	S4	Black		144D **3111**
		Red/Yellow		144E **3111**
$B6_{DS}$ … $B7_{DS}$	V1	Black	1, 3R, 12	2799 **7145**



S3 type handle



S4 type handle



V1 type handle

Shaft for external handle

Use

Standard lengths:
- 7.9 in / 200 mm,
- 12.6 in / 320 mm,
- 15.7 in / 400 mm.

Other lengths: please consult us.
19.69 in / 500 mm available.





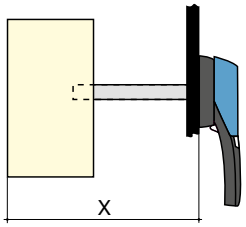

Frame size	Handle type	Dimension (inches)	Dimension X (mm)	Length (inches)	Length (mm)	Reference
B4	S2	6 … 11.6	150 … 295	7.9	200	1400 **1020**
		6 … 16.3	150 … 415	12.6	320	1400 **1032**
		6 … 19.4	150 … 495	15.7	400	1400 **1040**
B6	S3	8.70 … 13.50	220 … 343	7.9	200	1401 **1520**
		8.70 … 18.23	220 … 463	12.6	320	1401 **1532**
		8.70 … 21.38	220 … 543	15.7	400	1401 **1540**
B7	S4	12 … 14.4	305 … 366	7.9	200	1401 **1520**
		12 … 19.1	305 … 485	12.6	320	1401 **1532**
		12 … 22.2	305 … 564	15.7	400	1401 **1540**
$B4_{DS}$	S2	12 … 14.3	305 … 363	7.9	200	1400 **1020**
		12 … 19	305 … 483	12.6	320	1400 **1032**
		12 … 22.10	305 … 561	15.7	400	1400 **1040**
$B6_{DS}$	V1	20 … 28.1	508 … 714	12.6	320	4199 **3018**
		20 … 31.3	508 … 795	15.7	400	4199 **3019**
$B7_{DS}$		20 … 28.1	508 … 714	12.6	320	4199 **3018**
		20 … 39.4	508 … 795	15.7	400	4199 **3019**

S-type handle adapter

Use
For handles S2, S3 and S4.

Dimensions
Increases the distance between the handle grip and the door by 12 mm, for better handling.

Colour	Nema degree of protection	To be ordered in multiples of	Reference
Black	1, 3R, 12	10	1493 **0000**


acces_187

Auxiliary contact

Use
Pre-break and signaling of positions 0 and I:
- 1 to 2 NO/NC auxiliary contacts,
- 1 to 2 low level NO/NC auxiliary contacts.

Electrical characteristics
A300.

NO/NC contact

Frame size	Position AC	Type	Reference
B4 ... B7	1 contact	NO/NC	2799 **0021**
	2 contacts		2799 **0022**
$B4_{DS}$ ... $B7_{DS}$	1 contact		4159 **0021**

Low level NO/NC auxiliary contacts

Frame size	Position AC	Type	Reference
B4 ... B7	1 contact	NO/NC	2799 **0121**
	2 contacts		2799 **0122**
$B4_{DS}$ ... $B7_{DS}$	1 contact		4159 **0022**


acces_076

Terminal screen

Use
Top or bottom protection against direct contact with terminals or connection parts.

Frame size	No. of poles	Position	Pack	Reference
B4	2 P	Top	1 unit	2798 **3021**
	2 P	Bottom	1 unit	2798 **8021**
B6	4 P	Top or bottom	1 unit	2798 **4061**
$B4_{DS}$	2 P	Top or bottom	1 unit	4158 **3021**
$B5_{DS}$	6 P	Top or bottom	1 unit	4158 **3041**
	8 P	Top or bottom	1 unit	4158 **4041**
$B6_{DS}$	8 P	Top and bottom	2 units	2798 **8061**
$B7_{DS}$	8 P	Top or bottom	1 unit	2798 **4121**


acces_079

Accessories (continued)

Bridging bars for connecting poles in series

Use

The bridging bars will make easy the connection of the poles in series, allowing the following configurations(1).

(1) Other connections: refer to mounting instructions.

1000 VDC

Switch Reference	Frame size	Rating (A)	Quantity of bridging bar kits to be order per switch		Fig. of one bridging bar kit	Bridging bar kit Reference
			Not connected to earth	Connected to earth		
1 PV circuit						
27PV **2009**	B4	100	N/A	1	1	2709 **1020**
27PV **2019**	B4	200	N/A	1	1	2709 **1020**
27PV **2024**	B4	250	N/A	1	1	2709 **1020**
27PV **4060**	B6	600	2	3	2	2709 **0062**
27PV **4081**	B7	800	2	3	3	2709 **0081**
27PV **4121**	B7	1200	2	3	4	2709 **0121**
27PV **4201**	$B7_{DS}$	2000	6	6(1)	4	2709 **0121**
2 PV circuits						
27PV **5009**	$B4_{DS}$	100	N/A	2	1	2709 **1020**
27PV **5024**	$B4_{DS}$	250	N/A	2	1	2709 **1020**
27PV **8060**	$B6_{DS}$	600	4	6	2	2709 **0062**
27PV **8081**	$B7_{DS}$	800	4	6	4	2709 **0121**
27PV **8101**	$B7_{DS}$	1000	4	6	4	2709 **0121**

(1) Please order paralleling kit to connect back and front switches, see paralleling connection kit.

acces_391_b_1_x_cat

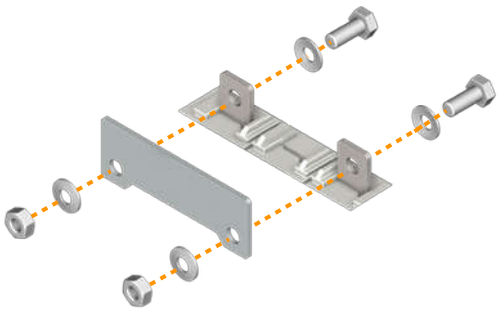

Fig. 1

acces_383_a_1_x_cat

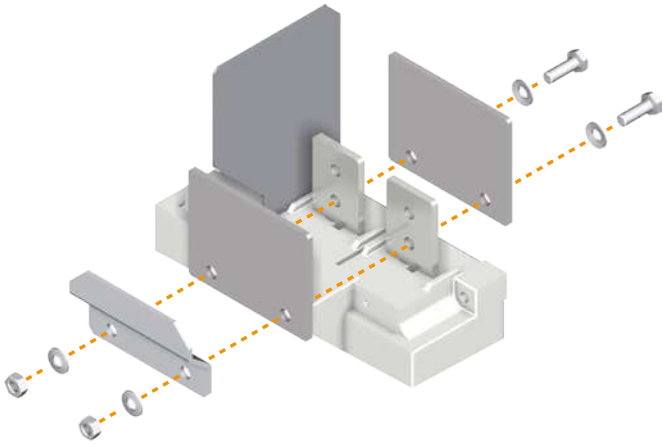

Fig. 2

acces_449_a_1_x_cat

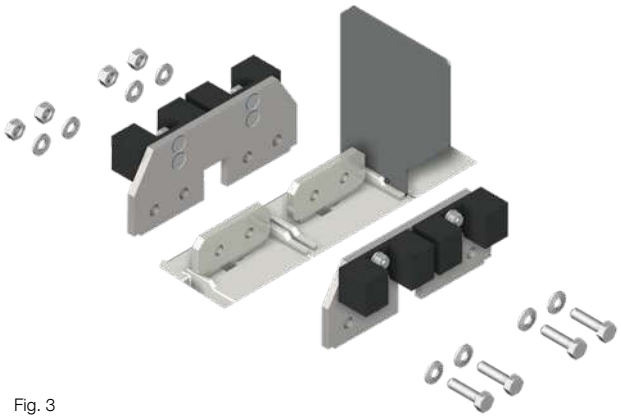

Fig. 3

acces_450_a_1_x_cat

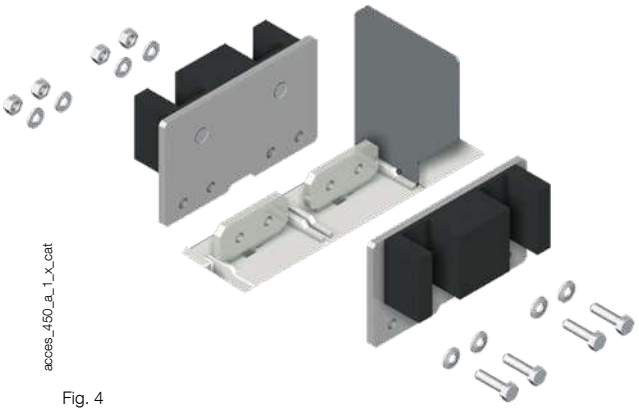

Fig. 4

Cage terminals

Use

Connection of bare copper cables onto the terminals (without lugs).
Optional fan out kit for ratings of 800 to 1200 A for connecting several cables to the switch.

Frame size	Rating max (A)	Numbrer and size of cables	Max. number of connections per terminal	Type of cable	Quantity	Reference
B4 - $B4_{DS}$	100 … 250	1 conductor (#6-300MCM)	1	Cu / Al	2 lugs	3954 **2020**
		2 conductors (#4-2/0)	1	Cu / Al	2 lugs	3954 **2025**
B6 - $B6_{DS}$	600	2 conductors (#2-600MCM)	1	Cu / Al	2 lugs	3954 **2060**
B7	800 … 1200	2 conductors (#2-600MCM)	2	Cu / Al	2 lugs	3954 **2060**
		2 conductors (#2-600MCM)	3(1)	Cu / Al	3 lugs	3954 **3060**
$B7_{DS}$	2000	2 conductors (#2-600MCM)	2(2)	Cu / Al	2 lugs	3954 **2060**
		2 conductors (#2-600MCM)	3(3)	Cu / Al	3 lugs	3954 **3060**



(1) Order a fan out kit reference 2709 1203 for connecting 3 connectors per terminal (6 in total for the switch).
(2) 2 connectors per terminal with the connection kit 2729 1200.
(3) 3 connectors per terminal with the connection kits 2729 1201 and 2709 1202.

Copper bar connection kits

Use

To allow connection between the two power terminals from a same pole for 2000 A ratings (Fig. 1, Fig. 2 and Fig. 3).
For 600 A, please consult us.

Fig. 1

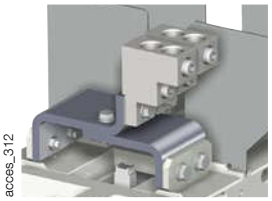

Fig. 2

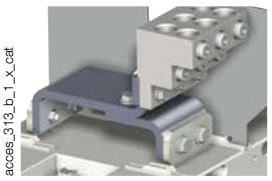

Fig. 3

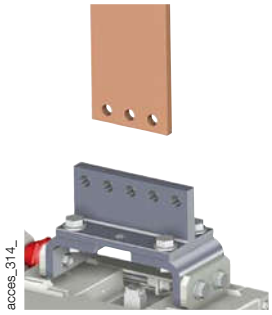

Top or bottom flat connection

Frame size	Rating (A)	Figure	Quantity to order per pole	Number of terminals	Reference
$B7_{DS}$	800 … 1000	1	1	2	2729 **1200**
		2	1	3	2729 **1202**
	2000	1	1	2	2729 **1200**
		2	1	3	2729 **1202**

Top or bottom edgewise connection

Frame size	Rating (A)	Figure	Quantity to order per pole	Number of terminals	Reference
$B7_{DS}$	800 … 2000	3	1	3	2729 **1201**

Pole connections in series

1 PV circuit - 1000 VDC

B4 - 2 P

Connected to earth

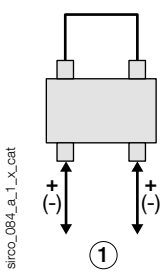

Not connected to earth

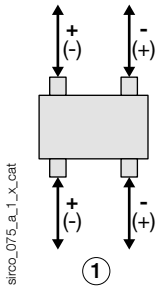

B6-B7 - 4 P

Connected to earth

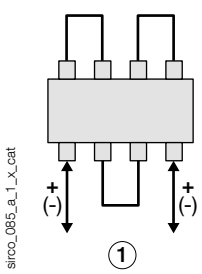

Not connected to earth

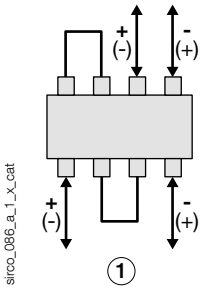

Not connected to earth

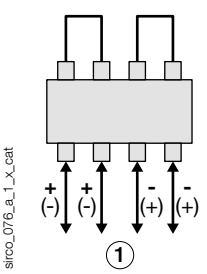

B7$_{DS}$ - 8 P

Connected to earth

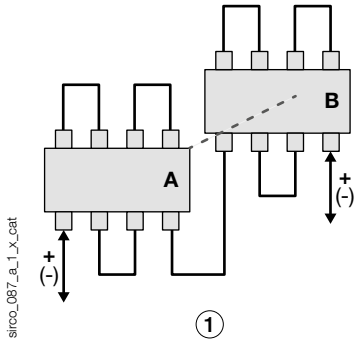

Not connected to earth

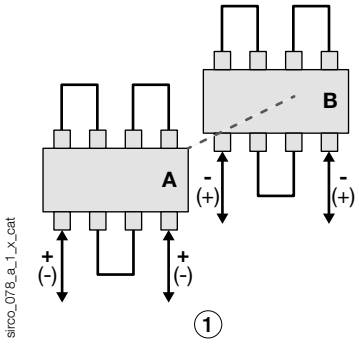

A. Front switch.
B. Rear switch.
1. Circuit 1.

2 PV circuit - 1000 VDC

$B4_{DS}$ - 4P

Connected to earth

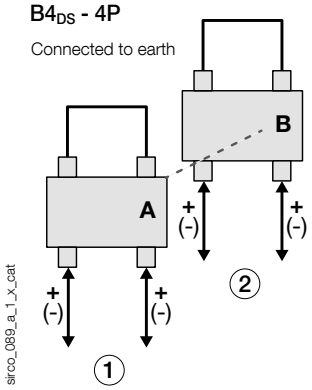

sirco_089_a_1_x_cat

Not connected to earth

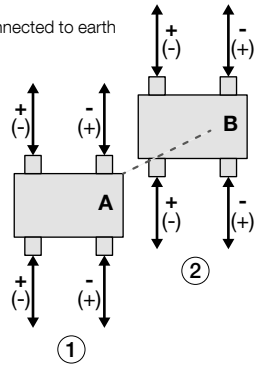

sirco_079_a_1_x_cat

$B7_{DS}$ - 8P

Connected to earth

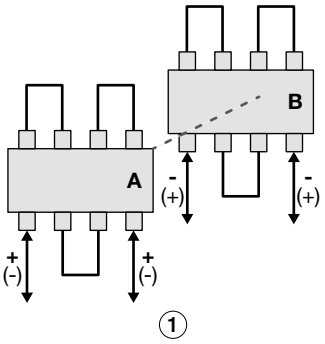

sirco_078_a_1_x_cat

Not connected to earth

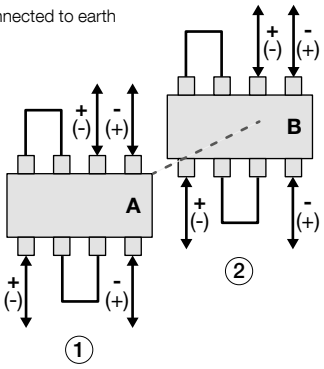

sirco_091_a_1_x_cat

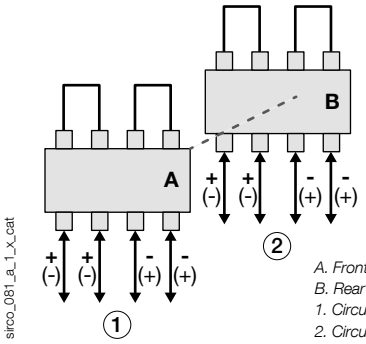

sirco_081_a_1_x_cat

A. Front switch.
B. Rear switch.
1. Circuit 1.
2. Circuit 2.

Characteristics

Compliance to UL 98B and IEC 60947-3 standards

SIRCO PV UL 98B switches comply with both UL 98B and IEC 60947-3 standards. As acceptance test criteria are different depending on one or the other standard, the same product can be referred to with two different ratings, identified in the characteristic table as follows:

- "Rating" for characteristics as per standard UL 98B.
- "Rated current" for characteristics as per standard IEC 60947-3.

UL 98B									
Rating (A)			**100 A**				**200 A**		
Number of circuits	**Rated voltage**		**(A)**	**Number of pole(s) in series per polarity**	**Number of pole(s) of the device**	**Frame size**	**(A)**	**Number of pole(s) in series per polarity**	**Number of pole(s) of the device**	**Frame size**
1 circuit	1000 VDC		100	2 P	2 P	B4	200	2 P	2 P	B4
2 circuits	600 VDC		100	1 P	2 P	B4	130	1 P	2 P	B4
2 circuits	1000 VDC		100	2 P	4 P	$B4_{DS}$	200	2 P	4 P	$B4_{DS}$
4 circuits	600 VDC		100	1 P	4 P	$B4_{DS}$	130	1 P	4 P	$B4_{DS}$
Short-circuit capacity at 1000 VDC (any circuit breaker)										
Prospective short-circuit current (kA rms DC)			10(1)				10(1)			
Connection terminals										
Min. connection wire range/ AWG			#6				#6			
Max. connection wire range/ AWG			300MCM				300MCM			
Mechanical characteristics										
Durability (number of operating cycles)			10 000				10 000			
Operating effort (lbs.in/Nm)			88.5/10				88.5/10			
Auxiliary contact										
Electrical characteristics			A300				A300			
IEC 60947-3										
Rated current In			**160 A**				**250 A**			
Thermal current at 40°C (A)			**160**				**250**			
Thermal current at 50°C (A)			**160**				**250**			
Thermal current at 60°C (A)			**160**				**250**			
Rated insulation voltage U_i (V)			1500				1500			
Rated impulse withstand voltage U_{imp} (kV)			12				12			
Number of circuits	**Rated voltage**	**Utilisation category**	**(A)**	**Number of pole(s) in series per polarity**	**Number of pole(s) of the device**	**Frame size**	**(A)**	**Number of pole(s) in series per polarity**	**Number of pole(s) of the device**	**Frame size**
1 circuit	1000 VDC	DC-21 B	160	2 P	2 P	B4	250	2 P	2 P	B4
1 circuit	1500 VDC	DC-21 B	160	4 P	4 P	$B4_{DS}$	250	4 P	4 P	$B4_{DS}$
2 circuits	1000 VDC	DC-21 B	160	2 P	4 P	$B4_{DS}$	250	2 P	4 P	$B4_{DS}$
4 circuits	600 VDC	DC-21 B	125	1 P	4 P	$B4_{DS}$	160	1 P	4 P	$B4_{DS}$

(1) Without fuse during 50 ms.

as per standards UL 98B and IEC 60947-3

UL 98B									
Rating			**250 A**				**600 A**		
Number of circuits	**Rated voltage**		**(A)**	**Number of pole(s) in series per polarity**	**Number of pole(s) of the device**	**Frame size**	**(A)**	**Number of pole(s) in series per polarity**	**Number of pole(s) of the device**	**Frame size**
1 circuit	1000 VDC		250	2 P	2 P	B4	600	4 P	4 P	B6
2 circuits	600 VDC		130	1 P	2 P	B4	-	-	-	-
2 circuits	1000 VDC		250	2 P	4 P	$B4_{DS}$	600	4 P	8 P	$B6_{DS}$
4 circuits	600 VDC		130	1 P	4 P	$B4_{DS}$	-	-	-	-
Short-circuit capacity at 1000 VDC (any circuit breaker)									
Prospective short-circuit current (kA rms DC)			10[1]				10[1]			
Connection terminals									
Min. connection wire range/ AWG			#6				2x#2			
Max. connection wire range/ AWG			300MCM				2 x 600MCM			
Mechanical characteristics									
Durability (number of operating cycles)			10 000				6 000			
Operating effort (lbs.in/Nm)			88.5/10				327.5/37			
Auxiliary contact									
Electrical characteristics			A300				A300			
IEC 60947-3									
Rated current In			**315 A**				**800 A**		
Thermal current at 40°C (A)			**315**				**800**		
Thermal current at 50°C (A)			**315**				**800**		
Thermal current at 60°C (A)			**315**				**800**		
Rated insulation voltage U_i (V)			1500				1200			
Rated impulse withstand voltage U_{imp} (kV)			12				12			
Number of circuits	**Rated voltage**	**Utilisation category**	**(A)**	**Number of pole(s) in series per polarity**	**Number of pole(s) of the device**	**Frame size**	**(A)**	**Number of pole(s) in series per polarity**	**Number of pole(s) of the device**	**Frame size**
1 circuit	1000 VDC	DC-21 B	315	2 P	2 P	B4	800	4 P	4 P	B6
1 circuit	1500 VDC	DC-21 B	315	4 P	4 P	$B4_{DS}$	800	8 P	8 P	$B6_{DS}$
2 circuits	1000 VDC	DC-21 B	315	2 P	4 P	$B4_{DS}$	800	4 P	8 P	$B6_{DS}$
4 circuits	600 VDC	DC-21 B	160	1 P	4 P	$B4_{DS}$	-	-	-	-

(1) Without fuse during 50 ms.

Characteristics (continued)

as per standards UL 98B and IEC 60947-3

UL 98B									
Rating			**800 A**			**1200 A**			
Number of circuits	**Rated voltage**		**(A)**	**Number of pole(s) in series per polarity**	**Number of pole(s) of the device**	**Frame size**	**(A)**	**Number of pole(s) in series per polarity**	**Number of pole(s) of the device**	**Frame size**
1 circuit	1000 VDC		800	4 P	4 P	B7	1200	4 P	4 P	B7
2 circuits	600 VDC		800	3 P	6 P	$B7_{DS}$	1200	3 P	6 P	$B7_{DS}$
2 circuits	1000 VDC		800	4 P	8 P	$B7_{DS}$	1200	4 P	8 P	$B7_{DS}$
Short-circuit capacity at 1000 VDC (any circuit breaker)									
Prospective short-circuit current (kA rms DC)			10[1]				10[1]			
Connection terminals									
Min. connection wire range/ AWG			4x#2				4x#2			
Max. connection wire range/ AWG			6x 600MCM[2]				6x 600MCM[2]			
Mechanical characteristics									
Durability (number of operating cycles)			3 500				3 500			
Operating effort (lbs.in/Nm)			495.7/56				663.9/75			
Auxiliary contact									
Electrical characteristics			A300				A300			
IEC 60947-3									
Rated current In			**1000 A**				**1400 A**			
Thermal current at 40°C (A)			**1000**				**1400**			
Thermal current at 50°C (A)			**1000**				**1400**			
Thermal current at 60°C (A)			**1000**				**1400**			
Rated insulation voltage U_i (V)			1200				1200			
Rated impulse withstand voltage U_{imp} (kV)			12				12			
Number of circuits	**Rated voltage**	**Utilisation category**	**(A)**	**Number of pole(s) in series per polarity**	**Number of pole(s) of the device**	**Frame size**	**(A)**	**Number of pole(s) in series per polarity**	**Number of pole(s) of the device**	**Frame size**
1 circuit	1000 VDC	DC-21 B	1000	4 P	4 P	B7	1400	4 P	4 P	$B7_{DS}$
1 circuit	1500 VDC	DC-21 B	1000	8 P	8 P	$B7_{DS}$	1000	8 P	8 P	$B7_{DS}$
2 circuits	1000 VDC	DC-21 B	1000	4 P	8 P	$B7_{DS}$	1000	4 P	8 P	$B7_{DS}$

(1) Without fuse during 50 ms.
(2) Maximum 6 x 600MCM with fan out kit 2729 1203.
(3) 1200 VDC for B7.

as per standards UL 98B and IEC 60947-3

UL 98B						
Rating			**2000 A**			
Number of circuits	**Rated voltage**		**(A)**	**Number of pole(s) in series per polarity**	**Number of pole(s) of the device**	**Frame size**
1 circuit	1000 VDC		2000	8 P	8 P	$B7_{DS}$
Short-circuit capacity at 1000 VDC (any circuit breaker)						
Prospective short-circuit current (kA rms DC)			10(1)			
Connection terminals						
Min. connection wire range/ AWG			4x#2			
Max. connection wire range/ AWG			6x 600MCM(2)			
Mechanical characteristics						
Durability (number of operating cycles)			3 500			
Operating effort (lbs.in/Nm)			663.9/75			
Auxiliary contact						
Electrical characteristics			A300			
IEC 60947-3						
Rated current In			**2200 A**			
Thermal current at 40°C (A)			**2200**			
Thermal current at 50°C (A)			**1850**			
Thermal current at 60°C (A)			**1600**			
Rated insulation voltage U_i (V)			1200			
Rated impulse withstand voltage U_{imp} (kV)			12			
Number of circuits	**Rated voltage**	**Utilisation category**	**(A)**	**Number of pole(s) in series per polarity**	**Number of pole(s) of the device**	**Frame size**
1 circuit	1000 VDC	DC-21 B	2200	8 P	8 P	$B7_{DS}$

(1) Without fuse during 50 ms.
(2) Maximum 6 x 600MCM with fan out kit 2729 1203.

Dimensions (in/mm)

B4

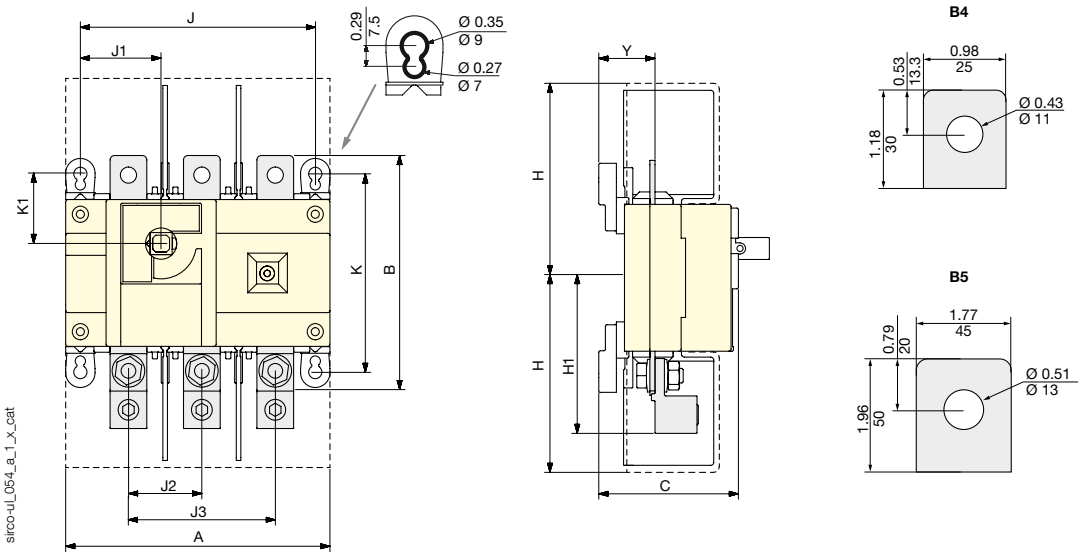

Frame size	No. of poles	Unit	A	B	C	H	H1 max.	J	J1	J2	J3	K	K1	Y
B4	2 P	inches	7.08	6.30	3.74	5.21	4.21	6.30	2.16	-	3.94	5.31	1.89	1.51
		mm	180	160	95	132.5	107	160	55	-	100	135	48	38.5

$B4_{DS}$

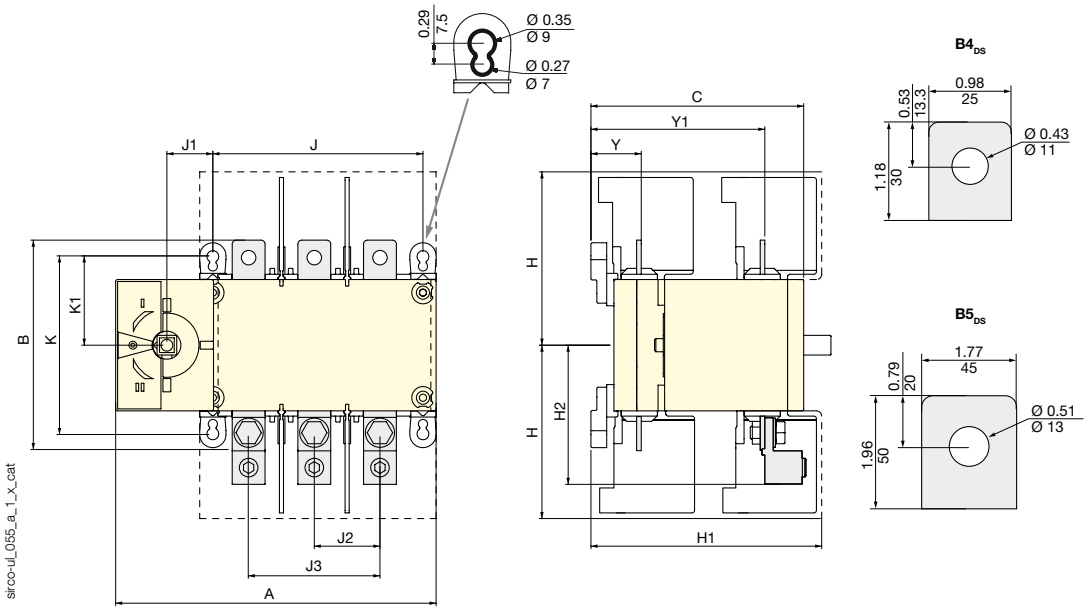

Frame size	No. of poles	Unit	A	B	C	H	H1	H1 max.	J	J1	J2	J3	K	K1	Y	Y1
$B4_{DS}$	4 P	inches	9.60	6.30	6.37	5.08	6.93	4.21	6.30	1.37	-	3.93	5.31	2.65	1.51	5.21
		mm	244	160	162	129	176	107	160	35	-	100	135	67.5	38.5	132.5

B6

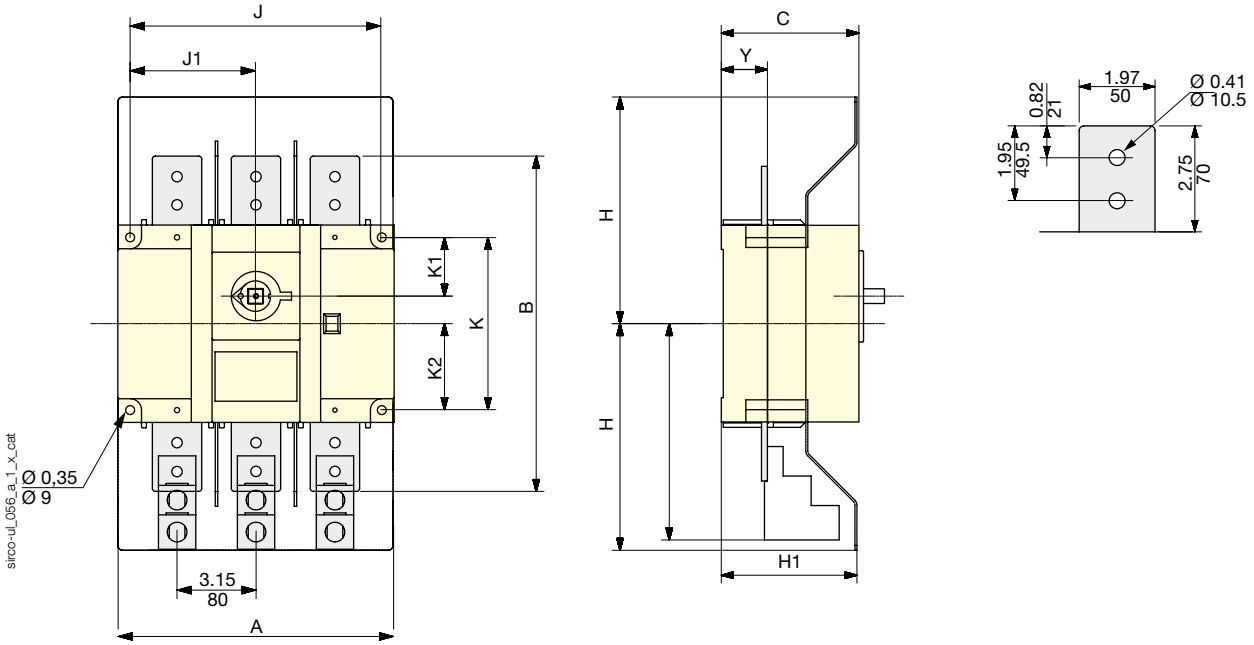

Frame size	No. of poles	Unit	A	B	C	H	H1	J	J1	K	K1	K2	Y
B6	4 P	inches	24.80	13.38	5.47	10.63	5.70	13.19	6.59	6.88	2.34	1.10	1.83
		mm	630	340	139	270	145	335	167.5	175	59.5	28	46.5

B6$_{DS}$

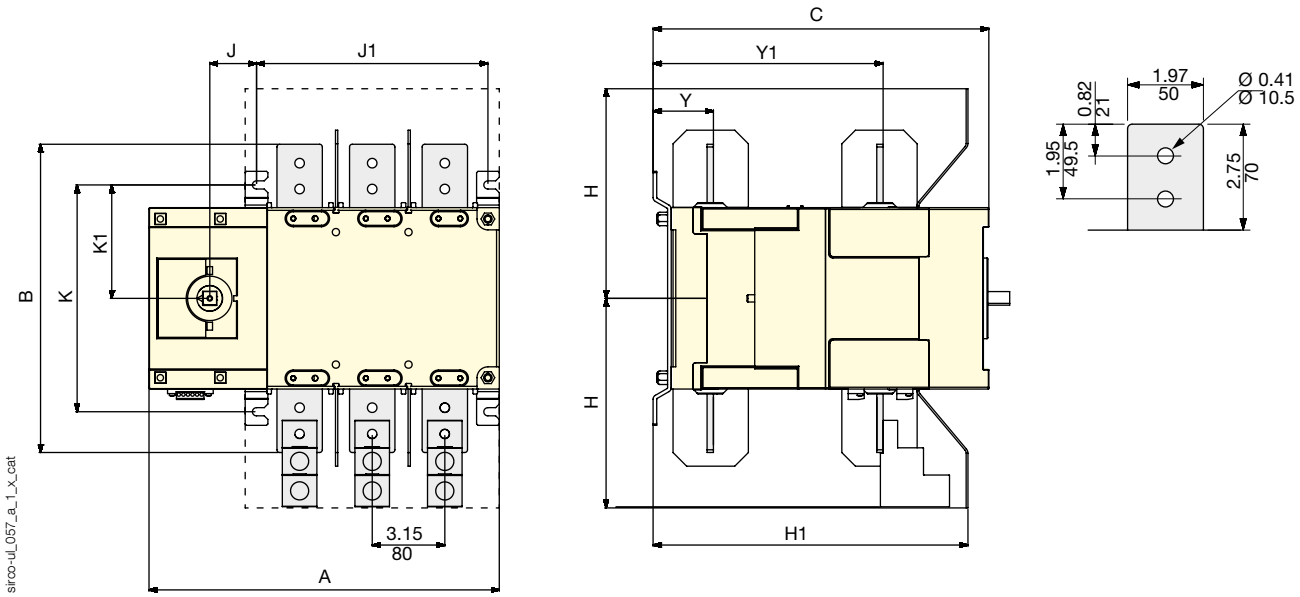

Frame size	No. of poles	Unit	A	B	C	H	H1	J	J1	K	K1	Y	Y1
B6$_{DS}$	8 P	inches	18.34	13.38	14.56	10.63	13.66	13.18	2.02	9.84	4.92	2.61	9.98
		mm	466	340	370	270	347	335	51.5	250	125	66.5	253.5

Dimensions (in/mm) (continued)

B7

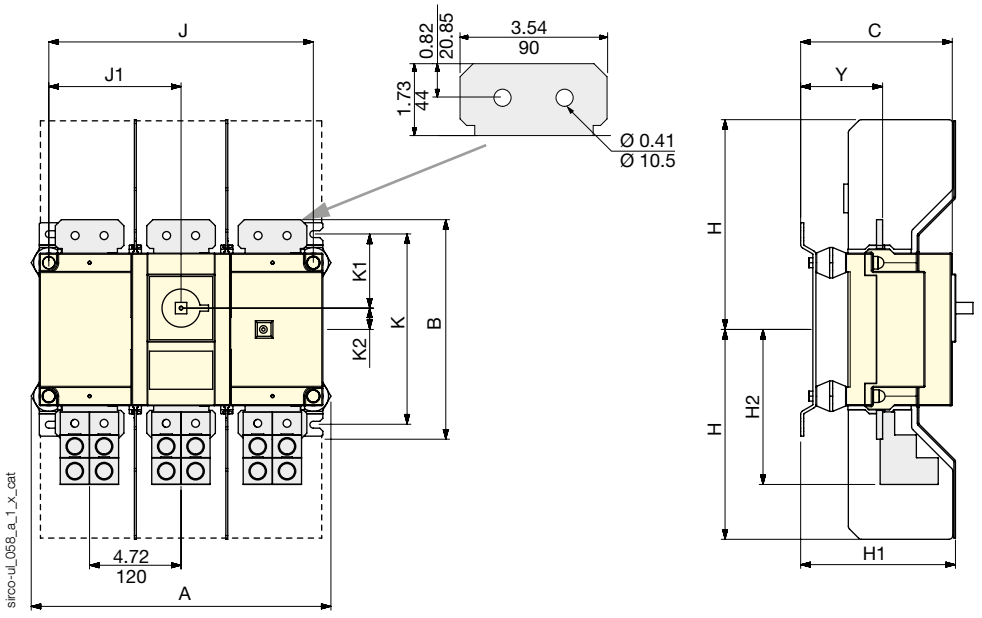

Frame size	No. of poles	Unit	A	B	C	H	H1	H2	J	J1	K	K1	K2	Y
B7	4 P	inches	20.19	11.33	7.97	11.89	8.30	8.01	18.38	9.19	9.84	3.82	1.10	4.23
		mm	513	288	200	302	211	203.5	467	233.5	250	97	28	107.5

B7$_{DS}$

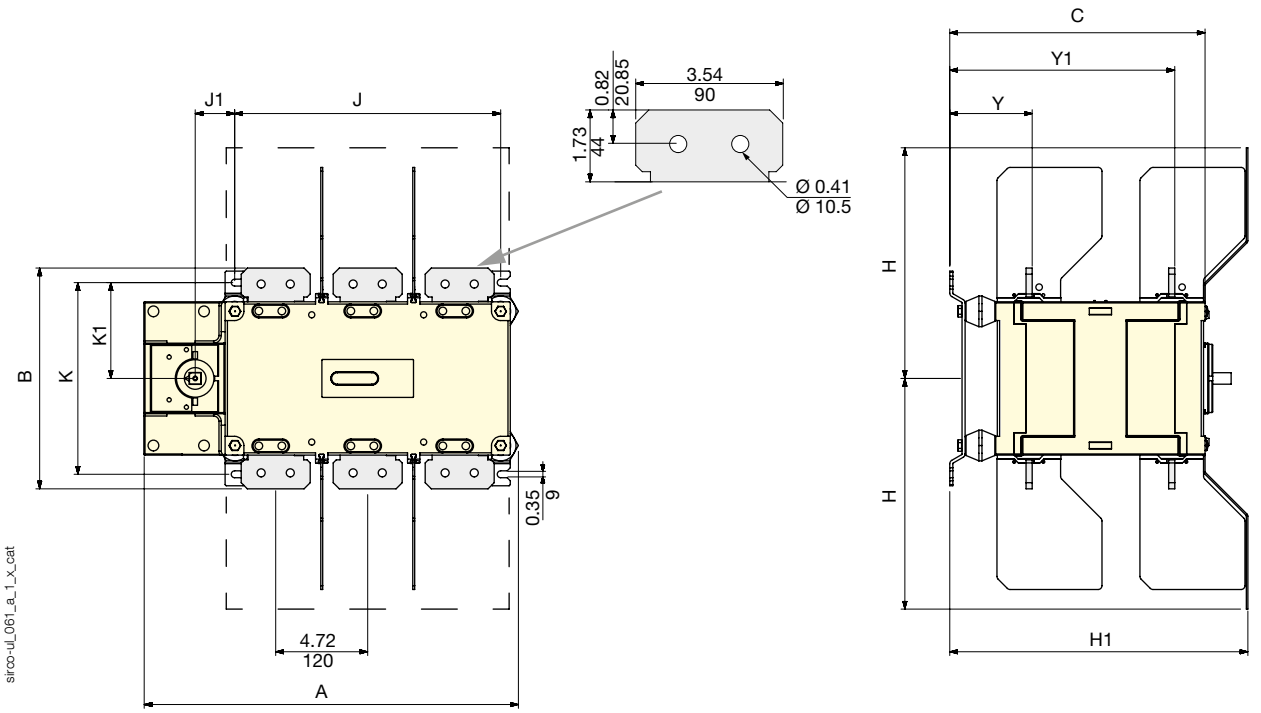

Frame size	No. of poles	Unit	A	B	C	H	H1	J	J1	K	K1	Y	Y1
B7$_{DS}$	8 P	inches	23.95	11.33	13.11	11.85	15.31	18.38	2.02	9.84	4.92	4.23	11.55
		mm	608.5	288	333	301	389	467	51.5	250	125	107.5	293.5

Dimensions for external handles (in/mm)

B4 - $B4_{DS}$

Handle type	Front operation Direction of operation	Door drilling
S2 type 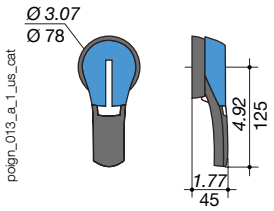	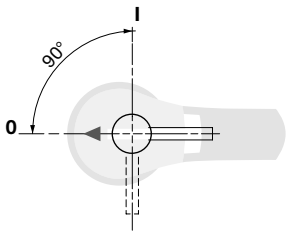	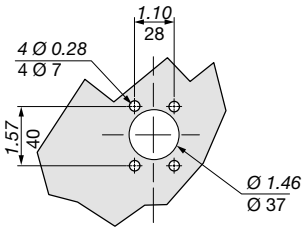

B6

Handle type	Front operation Direction of operation	Door drilling
S3 type 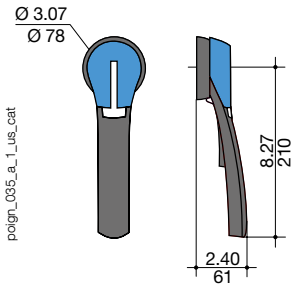	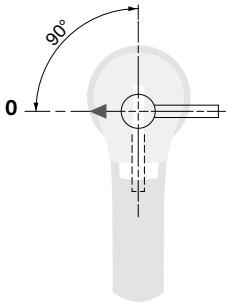	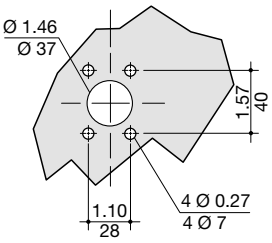

B7

Handle type	Front operation Direction of operation	Door drilling
S4 type 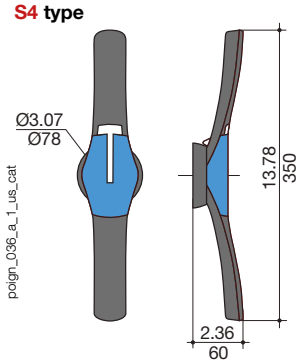	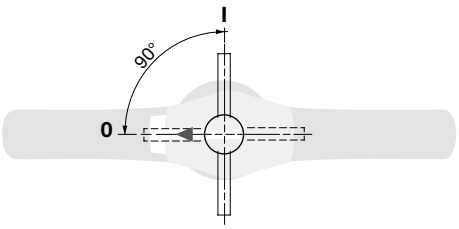	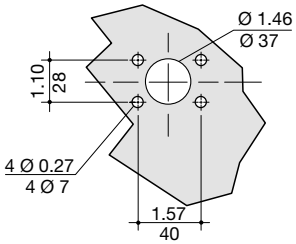

Dimensions for external handles (in/mm)

$B6_{DS}$ - $B7_{DS}$

Handle type	Front operation Direction of operation	Door drilling
V1 type 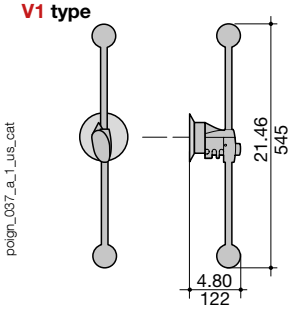	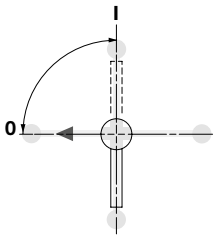	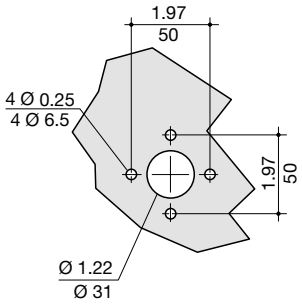

Bridging bars (in/mm)

$B4$ - $B4_{DS}$

2709 1020

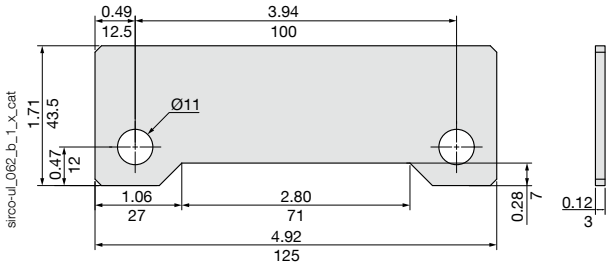

$B6$ - $B6_{DS}$

2709 0062

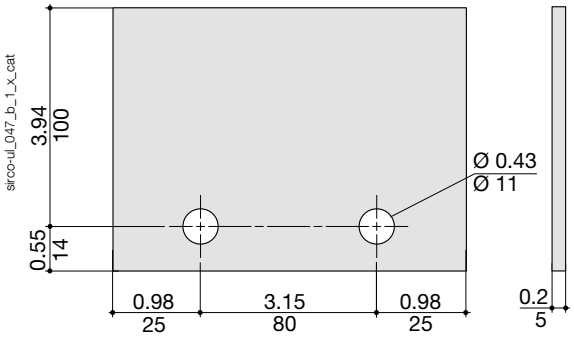

B7

2709 0081

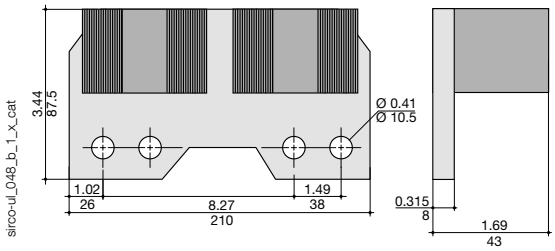

$B7$ - $B7_{DS}$

2709 0121

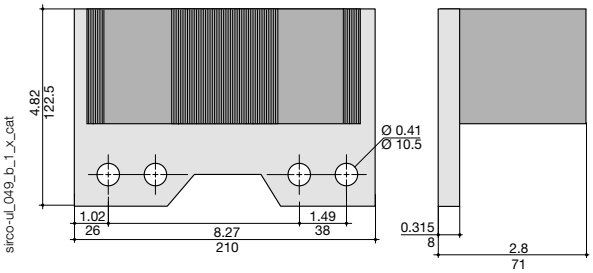

Mounting orientation

All frames

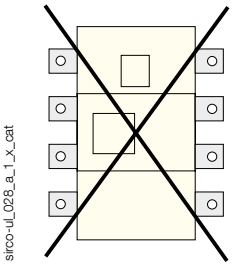

B4$_{DS}$

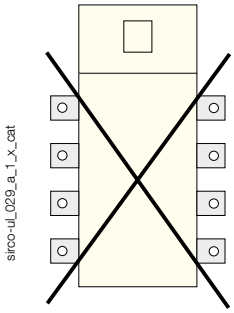

B6$_{DS}$ - B7$_{DS}$

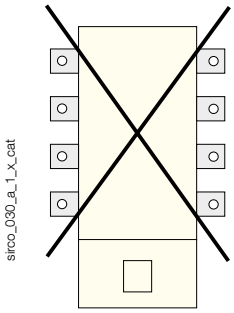

Terminal lugs (in/mm)

100 to 250 A

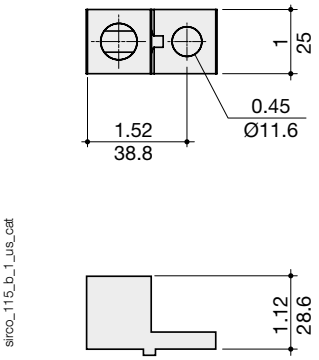

300MCM

100 to 250 A

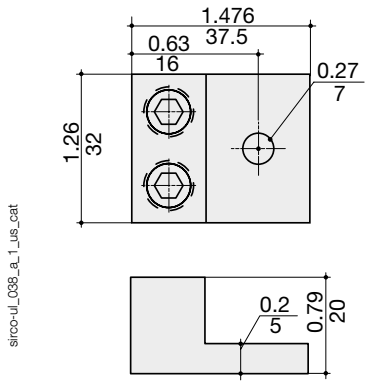

2/0

600 to 2000 A

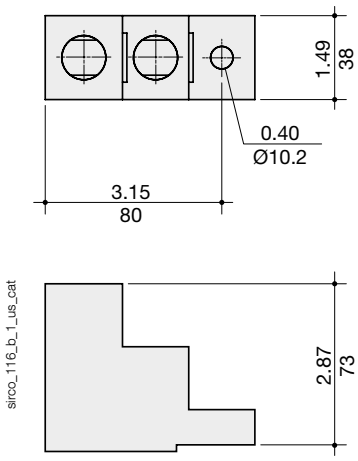

2 x 600MCM