Part Number: **BU-60PR2**
Description: **Phone Tip Alligator Clip**
3507

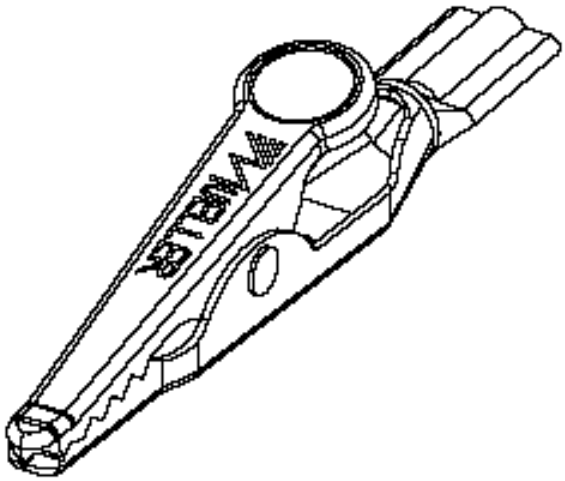

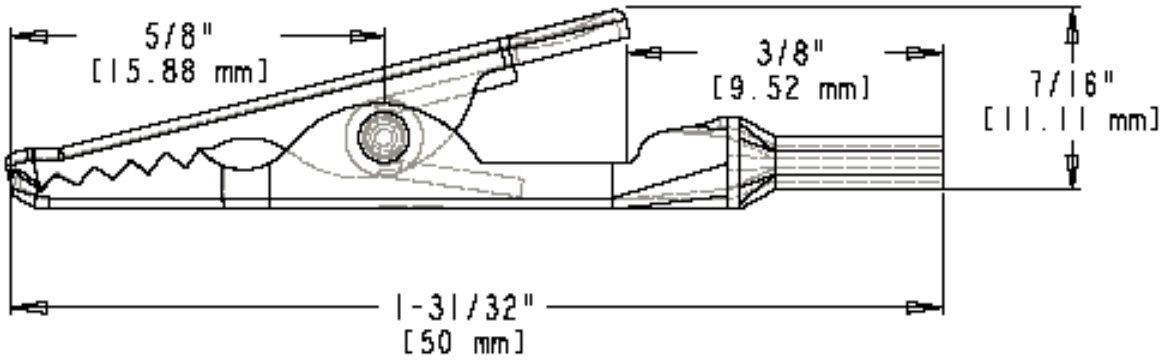

- Phone Tip Alligator Clip
- Accepts standard phone tip or test prod tip
- Jaw opens 0.31” (7.9 mm) max
- Material: nickel-plated steel
- Length: 1.97” (50 mm)
- Rating: 10 Amps
- RoHS Compliant

Mueller Electric Company *ISO 9001:2000* *TEL. 800-955-2629*
1625 E. 31st Street *Over 95 Years Of Innovation* *TEL. 216-771-5225*
Cleveland, Ohio 44114 *www.muellerelectric.com* *FAX. 216-771-3068*