efector200

O1D106

O1DLF3KG

Photoelectric sensors

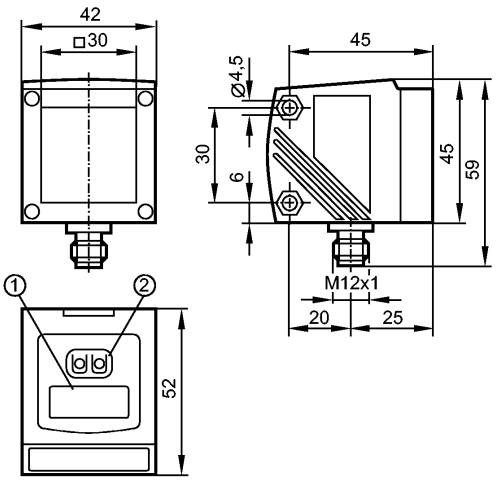

1: 4-digit alphanumeric display
2: Programming buttons

Made in Germany

Product characteristics		
Photoelectric distance sensor		
Connector		
Visible laser light, protection class 2 laser		
4-digit alphanumeric display		
Measuring range 1...75 m (on reflector E21159)		
Background suppression > 75...150 m		
Application 1...150 m		
Application		
Application	[m]	1...150
Electrical data		
Electrical design		DC PNP
Operating voltage	[V]	18...30 DC
Current consumption	[mA]	< 150
Life expectancy typ.	[h]	50000
Protection class		III
Reverse polarity protection		yes
Outputs		
Output function		OUT1: normally open / closed programmable OUT2: normally open / closed programmable or analogue (4...20 mA / 0...10 V, scalable)
Current rating	[mA]	2 x 200
Short-circuit protection		pulsed
Overload protection		yes
Analogue output		
current output	[mA]	4...20; according to IEC 61131-2
- Max. load	[Ω]	250
voltage output	[V]	0...10; according to IEC 61131-2
- Min. load	[Ω]	5000
Range		

efector200

O1D106

O1DLF3KG

Photoelectric sensors

Background suppression		> 75...150 m
Light spot diameter	[mm]	< 150 x 150 (Sensing range 75 m)

Measuring / setting range

Measuring range	[m]	1...75 (on reflector E21159)
Sampling rate	[Hz]	1...33

Environment

Ambient temperature	[°C]	-10...60
Protection		IP 67

Tests / approvals

EMC		EN 60947-5-2
MTTF	[Years]	186

Mechanical data

Housing materials		housing: diecast zinc; window: glass; LED window: polycarbonate
Weight	[kg]	0.293

Displays / operating elements

Display		Switching status 2 x LED yellow Operation LED green Distance, programming 4-digit alphanumeric display

Electrical connection

Connection		M12 connector

Wiring



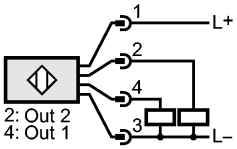

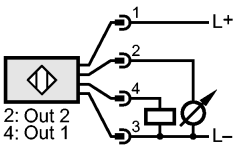

Remarks

Remarks		Caution: Laser Light Power <= 4.1 mW wavelength = 650 nm pulse 1.3 ns Do not stare into beam Avoid exposure Class 2 laser product EN 60825-1:2003-10 cULus - Class 2 source required
Pack quantity	[piece]	1

Other data

Parameter	Setting range	Factory setting
Uni	m, feet	m
OU1	Hno, Hnc, Fno, Fnc	Hno
SP1	1.00...75.00	10.00
nSP1	1.00...75.00	8.00
FSP1	1.00...75.00	12.00
OU2	Hno, Hnc, Fno, Fnc, I, U	I
SP2	1.00...75.00	20.00
nSP2	1.00...75.00	18.00

FSP2	1.00...75.00	22.00
ASP	0...75.00	0
AEP	0...75.00	75.00
rATE [Hz]	1...33	15
dS1	0...0.1...5	0
dr1	0...0.1...5	0
dS2	0...0.1...5	0
dr2	0...0.1...5	0
dAP	0...0.1...5	0.3
dIS	d1..3; rd1...3; OFF	d3

Repeatability / Accuracy
Sampling rate 33 Hz on reflector

	Repeatability of the measured values	Accuracy
1...25 m	± 15 mm	± 35 mm
30 m	± 15 mm	± 35 mm
40 m	± 15 mm	± 35 mm
50 m	± 19 mm	± 39 mm
60 m	± 27 mm	± 47 mm
70 m	± 43 mm	± 63 mm

Repeatability / Accuracy
Sampling rate 1 Hz on reflector

	Repeatability of the measured values	Accuracy
1...75 m	± 15 mm	± 35 mm

The values apply at
- constant ambient conditions: 23 °C / 960 hPa
- extraneous light max.: 100 klx
- minimum power-on time in minutes: 10