GLX63

DOOR-COUPLING HANDLE FOR GL0631…GL1000. SCREW FIXING. 175MM LEVER LENGTH PISTOL HANDLE - DEFEATABLE (REQ. UL508A). RED/YELLOW. □12MM. IP66, IP69K AND NEMA 4X



Dimensions

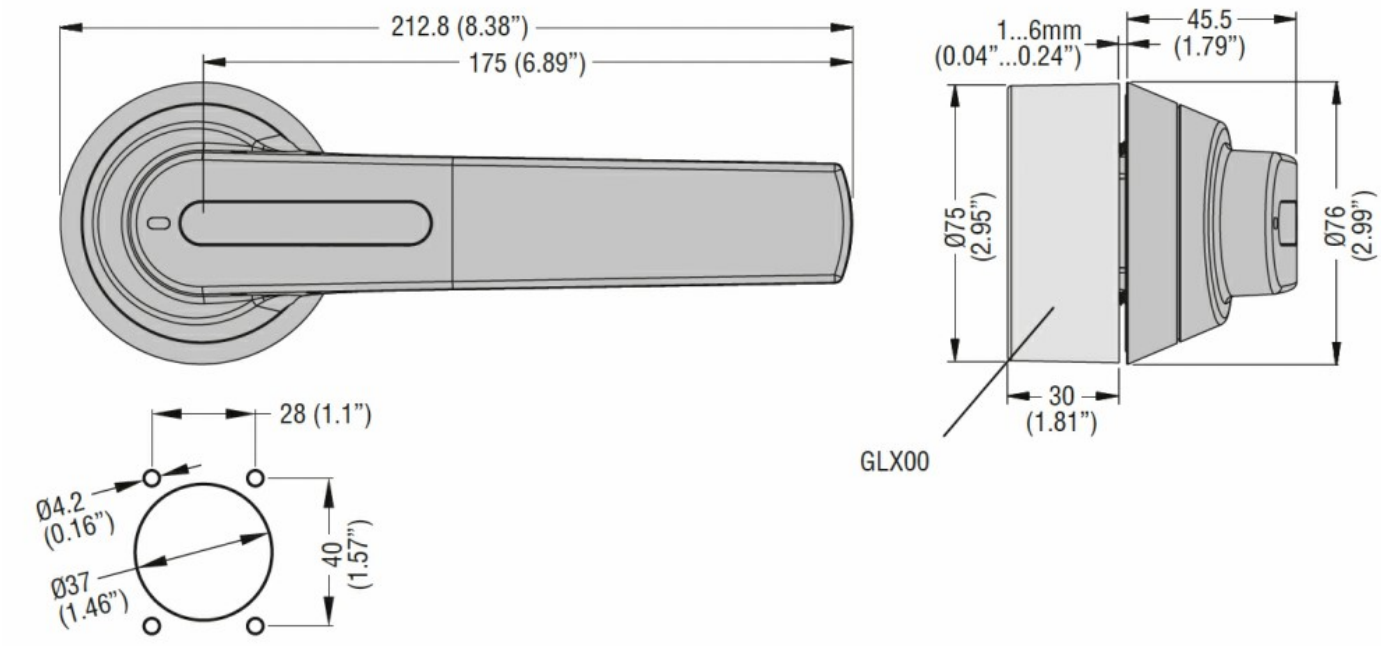

Certifications and compliance

Compliance

	IEC/EN 60947-1
	IEC/EN 60947-3

Certifications

	cULus

ETIM classification

ETIM 8.0	EC000230 - Door coupling handle for switchgear

The characteristics described in this document are subject to updates or modifications at any time. The descriptions, technical and functional information, illustrations and instructions in this brochure are purely illustrative, and are consequently not contractually binding